GESSI

65050

GPF6505000000G000

VENTI20

validity date
≥ 07/2022



Pull-out handshower drain kit, rim installation

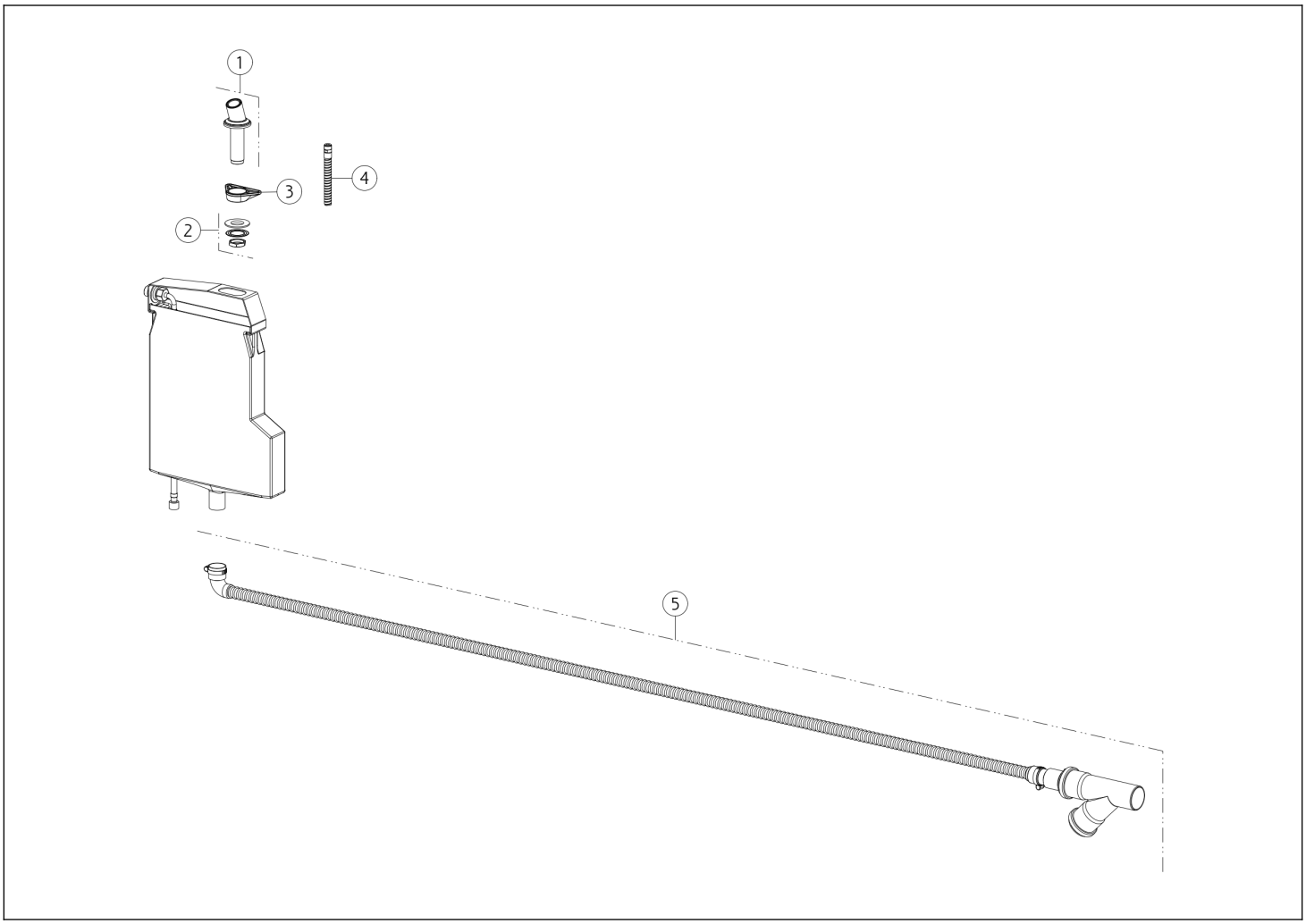

N°	Code	Description
1	SP04001	SHOWER HOLDER
2	SP01222	FIXING SET
3	SP00329	TRIANGULAR FLANGE

N°	Code	Description
4	SP01224	HOSE
5	SP00661	DRAINAGE DEVICE

Gessi S.p.A. Parco Gessi, 13037 Serravalle Sesia (Vercelli) Italy Tel. +39 0163 454111 Fax. +39 0163 453150 - www.gessi.com - gessi@gessi.it This drawing, as required by law, may not be made public or reproduced without the written authorization of GESSI S.p.A. Copyright GESSI S.p.A.