GESSI

65089

GPF6508900000G000

VENTI20

validity date
≥ 08/2021



External parts for wall-mounted basin mixer, medium spout, without waste

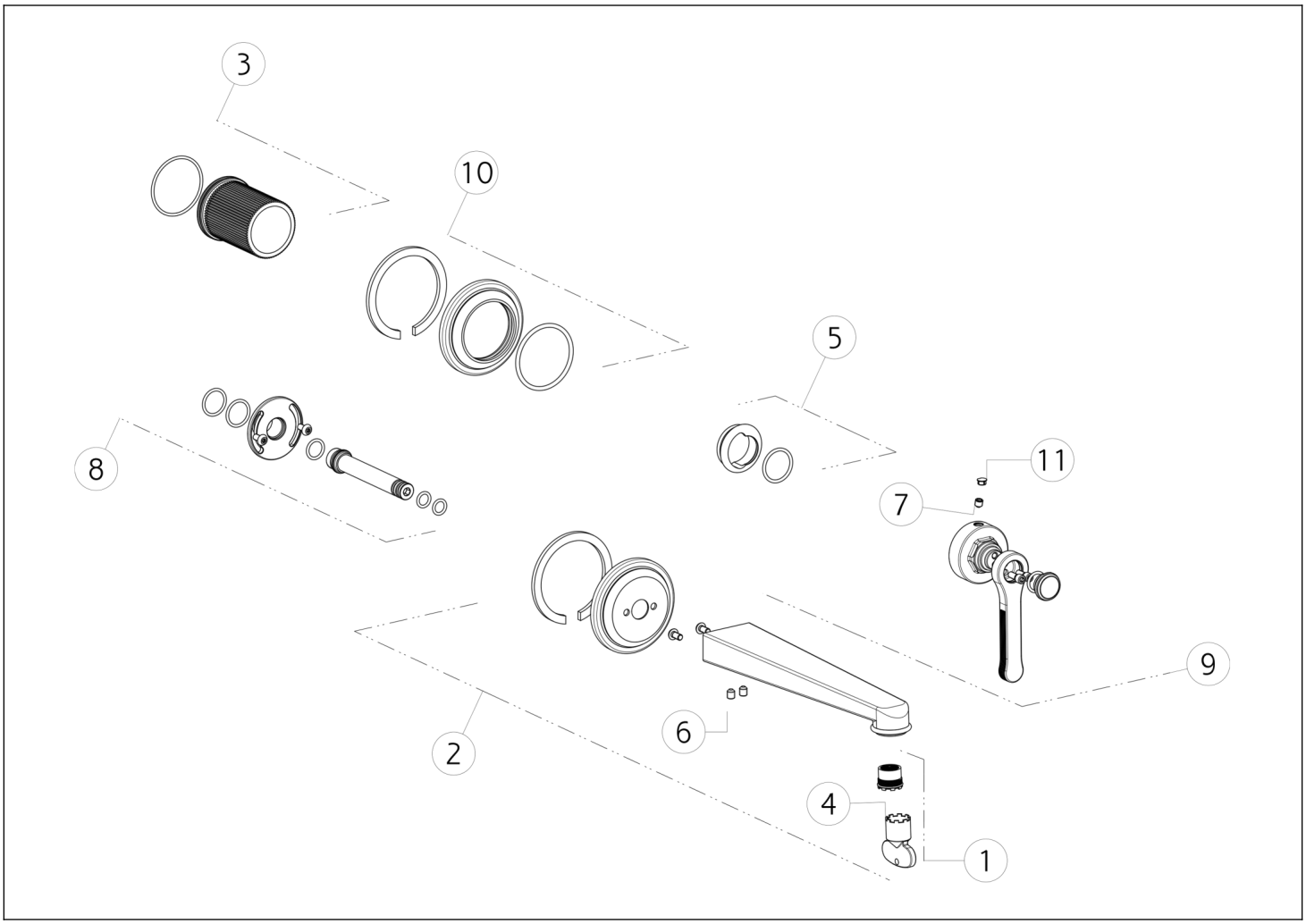

N°	Code	Description
1	SP01608	AERATOR
2	SP03401	COMPLETE SPOUT
3	SP03400	FINISHING BUSHING
4	SP00504	SPECIAL TOOL
5	SP03373	FINISHING RING NUT
6	SP00284	SCREW

N°	Code	Description
7	SP00610	SCREW
8	SP03397	JOINT
9	SP03375	HANDLE
10	SP03399	COVER
11	SP00002	SCREW COVER

Gessi S.p.A. Parco Gessi, 13037 Serravalle Sesia (Vercelli) Italy Tel. +39 0163 454111 Fax. +39 0163 453150 - www.gessi.com - gessi@gessi.it This drawing, as required by law, may not be made public or reproduced without the written authorization of GESSI S.p.A. Copyright GESSI S.p.A.