GESSI

65137

GPF6513700000G000

VENTI20

validity date
≥ 08/2021



External part for thermostatic mixer, three-way diverter

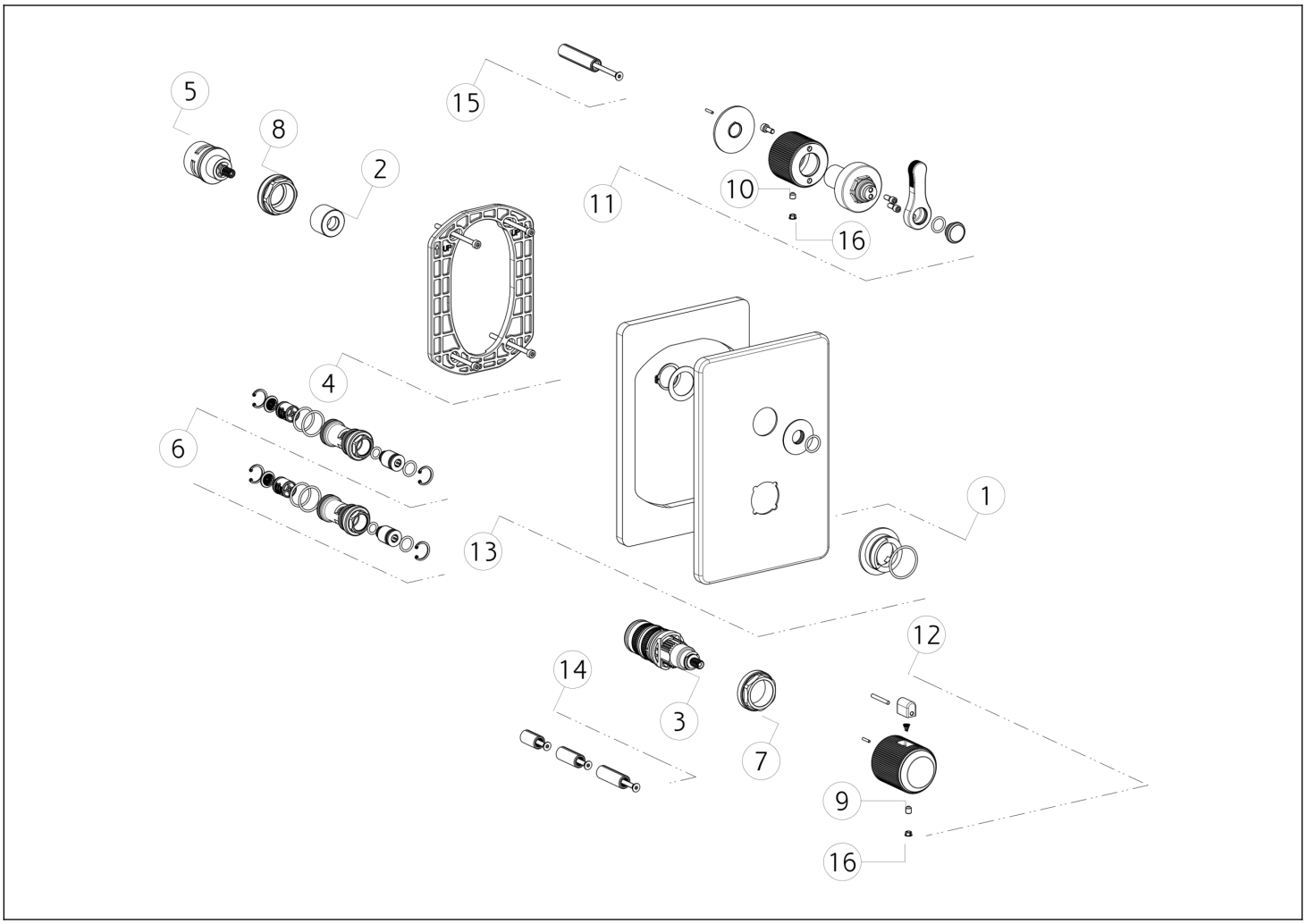

N°	Code	Description
1	SP01739	INDICATOR RING
2	SP03211	BUSH
3	SP01936	THERMOSTATIC CARTRIDGE
4	SP01868	SUB PLATE
5	SP01794	DIVERTER
6	SP01942	FILTER
7	SP01941	FIXING RING NUT
8	SP01945	FIXING RING NUT

N°	Code	Description
9	SP00284	SCREW
10	SP00610	SCREW
11	SP03452	HANDLE
12	SP03541	HANDLE
13	SP02456	FINISHING PLATE
14	SP01940	EXTENSION
15	SP01946	EXTENSION
16	SP00002	SCREW COVER

Gessi S.p.A. Parco Gessi, 13037 Serravalle Sesia (Vercelli) Italy Tel. +39 0163 454111 Fax. +39 0163 453150 - www.gessi.com - gessi@gessi.it This drawing, as required by law, may not be made public or reproduced without the written authorization of GESSI S.p.A. Copyright GESSI S.p.A.