GESSI

65158

GPF6515800000G000

VENTI20

validity date
≥ 06/2026



Wall-fixing adjustablle multifunction head shower

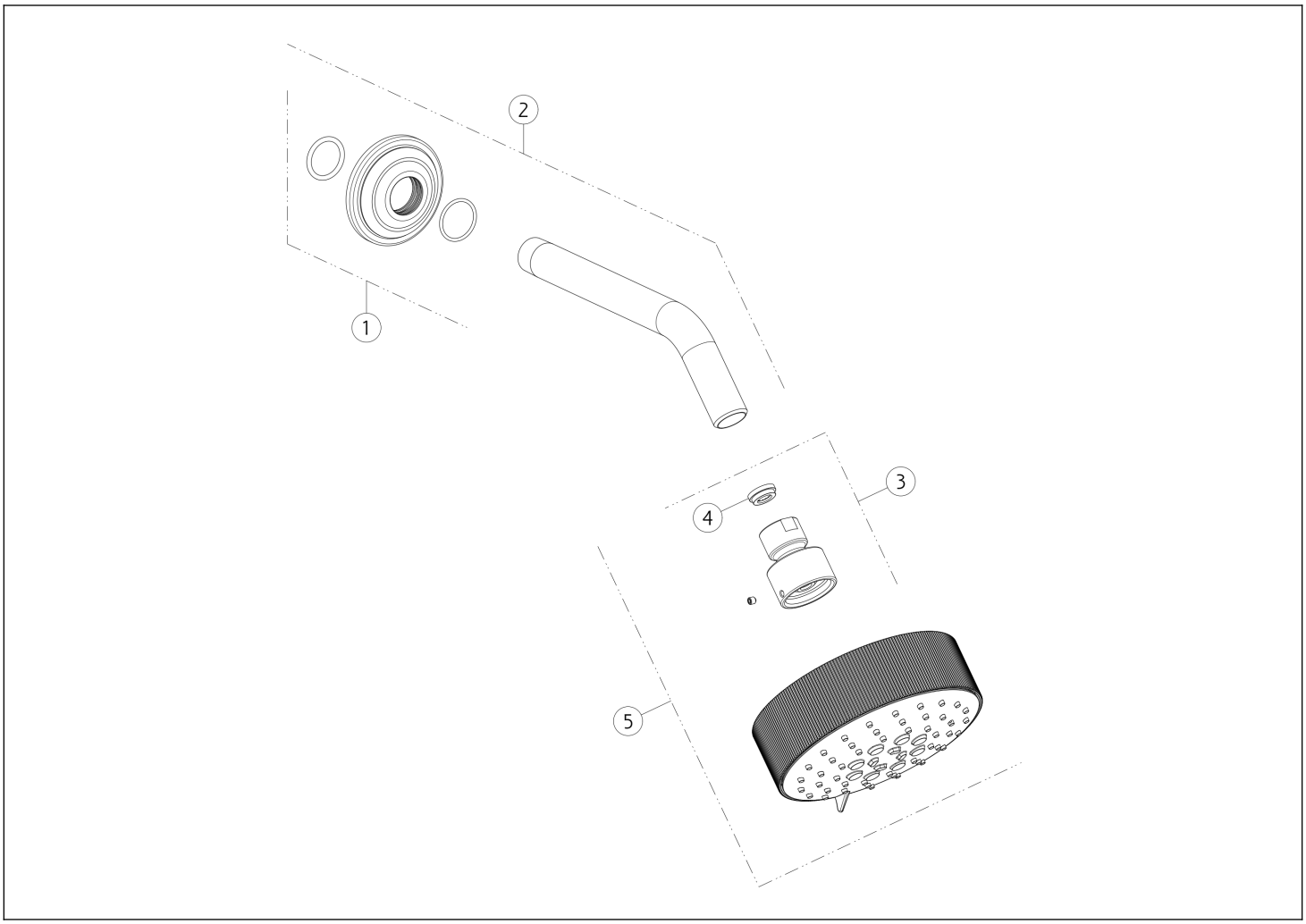

N°	Code	Description
1	SP03406	ROSETTE
2	SP04353	SHOWER ARM
3	SP00244	JOINT

N°	Code	Description
4	SP00900	FLOW LIMITING VALVE
5	SP05066	SHOWERHEAD

Gessi S.p.A. Parco Gessi, 13037 Serravalle Sesia (Vercelli) Italy Tel. +39 0163 454111 Fax. +39 0163 453150 - www.gessi.com - gessi@gessi.it This drawing, as required by law, may not be made public or reproduced without the written authorization of GESSI S.p.A. Copyright GESSI S.p.A.