GESSI

65517

GPF6551700000G000

VENTI20

validity date
≥ 04/2022



Safety grip-handle for bathtub and shower enclosure, 45 cm length

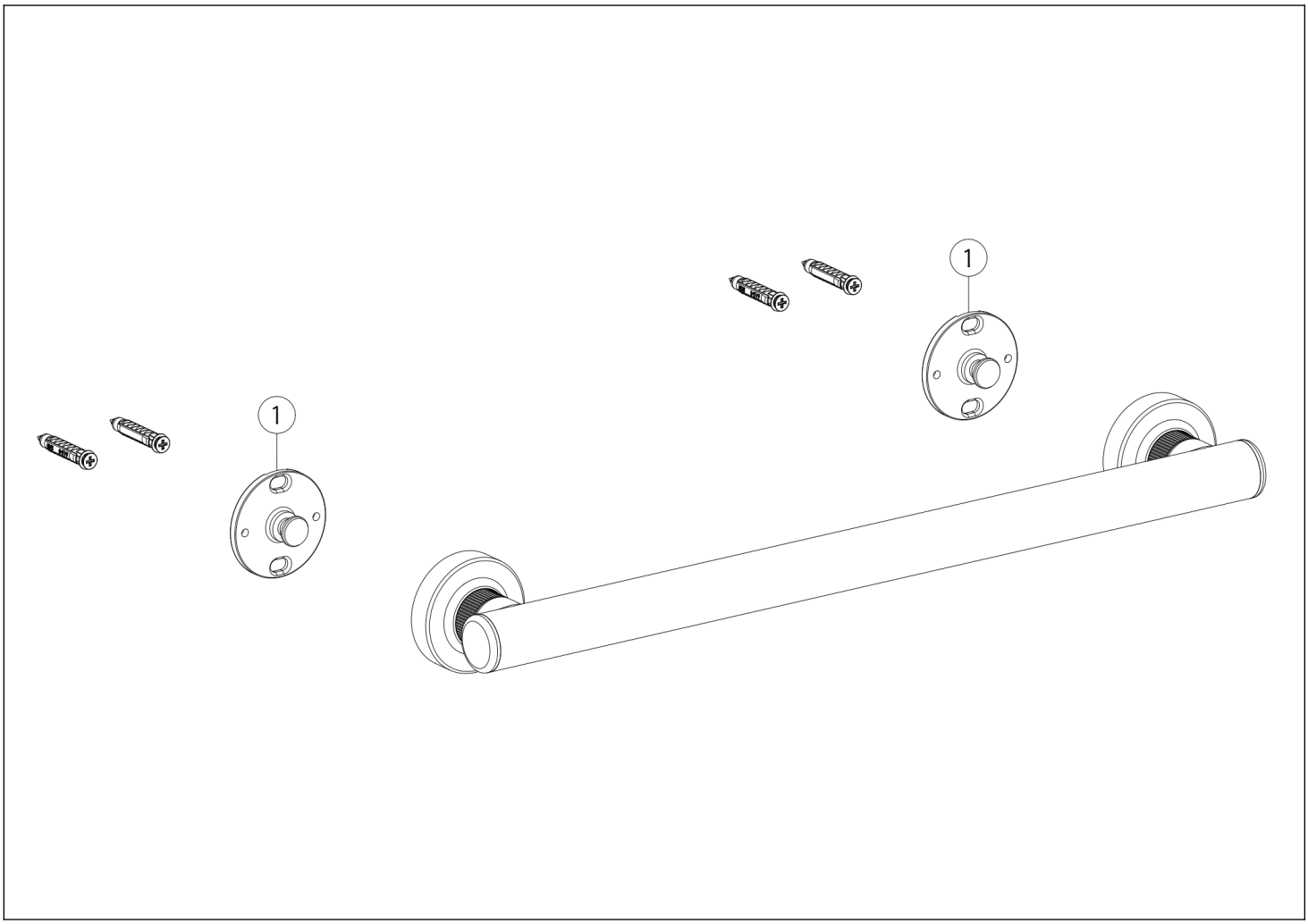

N°	Code	Description
1	SP04384	FLANGE

 This drawing, as required by law, may not be made public or reproduced without the written authorization of GESSI S.p.A. Copyright GESSI S.p.A.