GESSI

66002

GPF66002000000G000

ORIGINI

validity date
≥ 10/2022



Basin mixer without waste and connecting flexibles. Can be combined with inserts with different finishes: art. 66600 and art. 66602.

Table A - Insert code available	
Code	**Description**
PF66600	INSERT
PF66602	ART INSERT

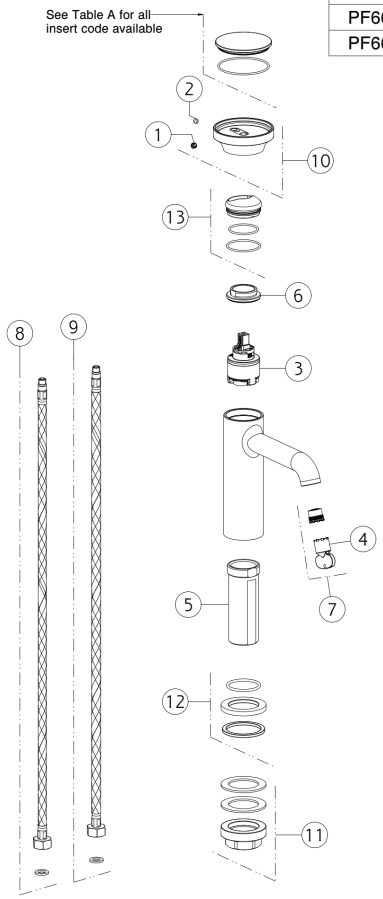

N°	Code	Description
1	SP00002	SCREW COVER
2	SP00137	SCREW
3	SP04305	CARTRIDGE
4	SP00504	SPECIAL TOOL
5	SP01701	SHANK
6	SP00020	FIXING RING NUT
7	SP01608	AERATOR

N°	Code	Description
8	SP01590	RED SUPPLY HOSE
9	SP01591	BLU SUPPLY HOSE
10	SP04094	HANDLE
11	SP02370	FIXING SET
12	SP04095	BASE
13	SP02305	FINISHING RING NUT

Gessi S.p.A. Parco Gessi, 13037 Serravalle Sesia (Vercelli) Italy Tel. +39 0163 454111 Fax. +39 0163 453150 - www.gessi.com - gessi@gessi.it This drawing, as required by law, may not be made public or reproduced without the written authorization of GESSI S.p.A. Copyright GESSI S.p.A.