GESSI

66003

GPF66003000000G000

ORIGINI

validity date
≥ 04/2023



High version basin mixer with waste and connecting flexibles. Can be combined with inserts with different finishes: art. 66600 and art. 66602.

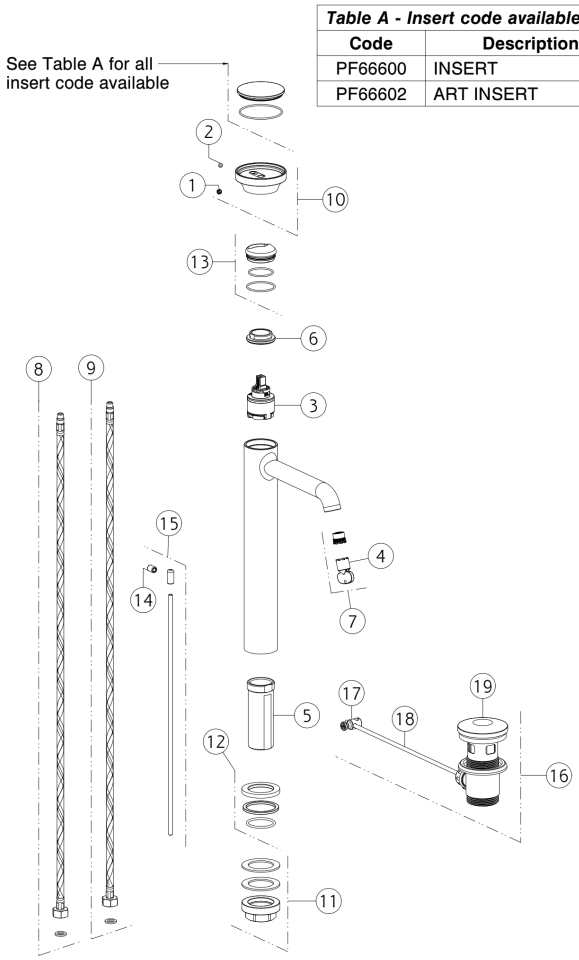

Table A - Insert code available	
Code	**Description**
PF66600	INSERT
PF66602	ART INSERT

N°	Code	Description
1	SP00002	SCREW COVER
2	SP00137	SCREW
3	SP04305	CARTRIDGE
4	SP00504	SPECIAL TOOL
5	SP01701	SHANK
6	SP00020	FIXING RING NUT
7	SP01608	AERATOR
8	SP01287	RED SUPPLY HOSE
9	SP01286	BLU SUPPLY HOSE
10	SP04094	HANDLE

N°	Code	Description
11	SP02370	FIXING SET
12	SP04095	BASE
13	SP02305	FINISHING RING NUT
14	SP00927	KNOB
15	SP02805	PULL ROD
16	PF29263	BASIN WASTE
17	SP00219	JOINT
18	SP00218	ROD
19	SP00772	PLUG

Gessi S.p.A. Parco Gessi, 13037 Serravalle Sesia (Vercelli) Italy Tel. +39 0163 454111 Fax. +39 0163 453150 - www.gessi.com - gessi@gessi.it This drawing, as required by law, may not be made public or reproduced without the written authorization of GESSI S.p.A. Copyright GESSI S.p.A.