GESSI

66004

GPF66004000000G000

validity date
≥ 11/2022



ORIGINI

High version basin mixer without waste and connecting flexibles. Can be combined with inserts with different finishes: art. 66600 and art. 66602.

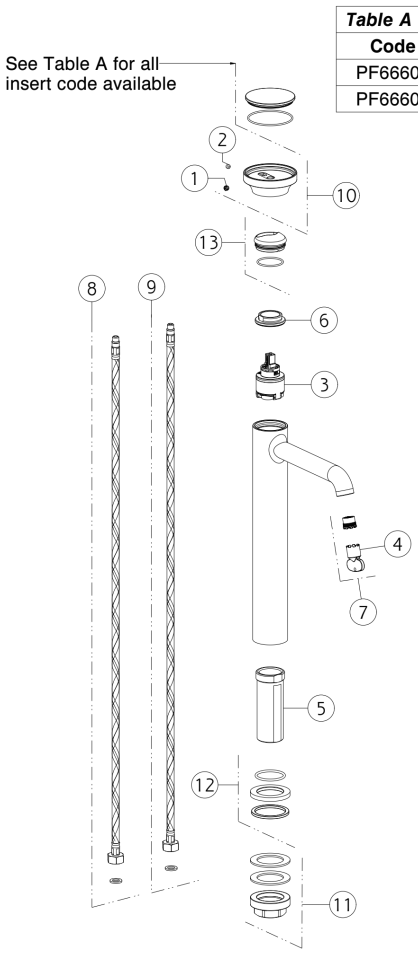

Table A - Insert code available	
Code	**Description**
PF66600	INSERT
PF66602	ART INSERT

N°	Code	Description
1	SP00002	SCREW COVER
2	SP00137	SCREW
3	SP04305	CARTRIDGE
4	SP00504	SPECIAL TOOL
5	SP01701	SHANK
6	SP00020	FIXING RING NUT
7	SP01608	AERATOR

N°	Code	Description
8	SP01287	RED SUPPLY HOSE
9	SP01286	BLU SUPPLY HOSE
10	SP04094	HANDLE
11	SP02370	FIXING SET
12	SP04095	BASE
13	SP02305	FINISHING RING NUT

 This drawing, as required by law, may not be made public or reproduced without the written authorization of GESSI S.p.A. Copyright GESSI S.p.A.