GESSI

66006

GPF66006000000G000

ORIGINI

validity date
≥ 11/2022



Medium version basin mixer without waste and connecting flexibles. Can be combined with inserts with different finishes: art. 66600 and art. 66602.

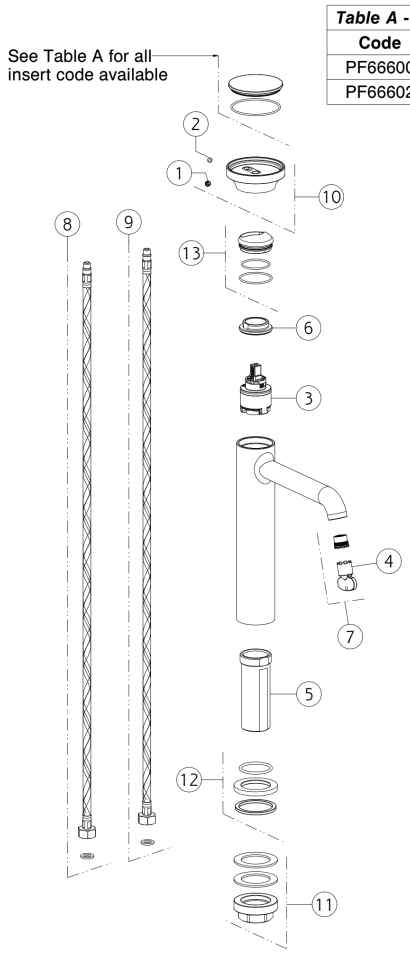

Table A - Insert code available

Code	Description
PF66600	INSERT
PF66602	ART INSERT

N°	Code	Description
1	SP00002	SCREW COVER
2	SP00137	GRUB SCREW
3	SP04305	CARTRIDGE
4	SP00504	KEY
5	SP01701	SHANK
6	SP00020	FIXING RING NUT
7	SP01608	AERATOR

N°	Code	Description
8	SP01287	RED SUPPLY HOSE
9	SP01286	BLUE SUPPLY HOSE
10	SP04094	HANDLE
11	SP02370	FIXING KIT
12	SP04095	BASE PLATE
13	SP02305	FINISHING RING NUT

 This drawing, as required by law, may not be made public or reproduced without the written authorization of GESSI S.p.A. Copyright GESSI S.p.A.