GESSI

66025

GPF66025000000G000

ORIGINI

validity date
≥ 01/2023



High spout basin

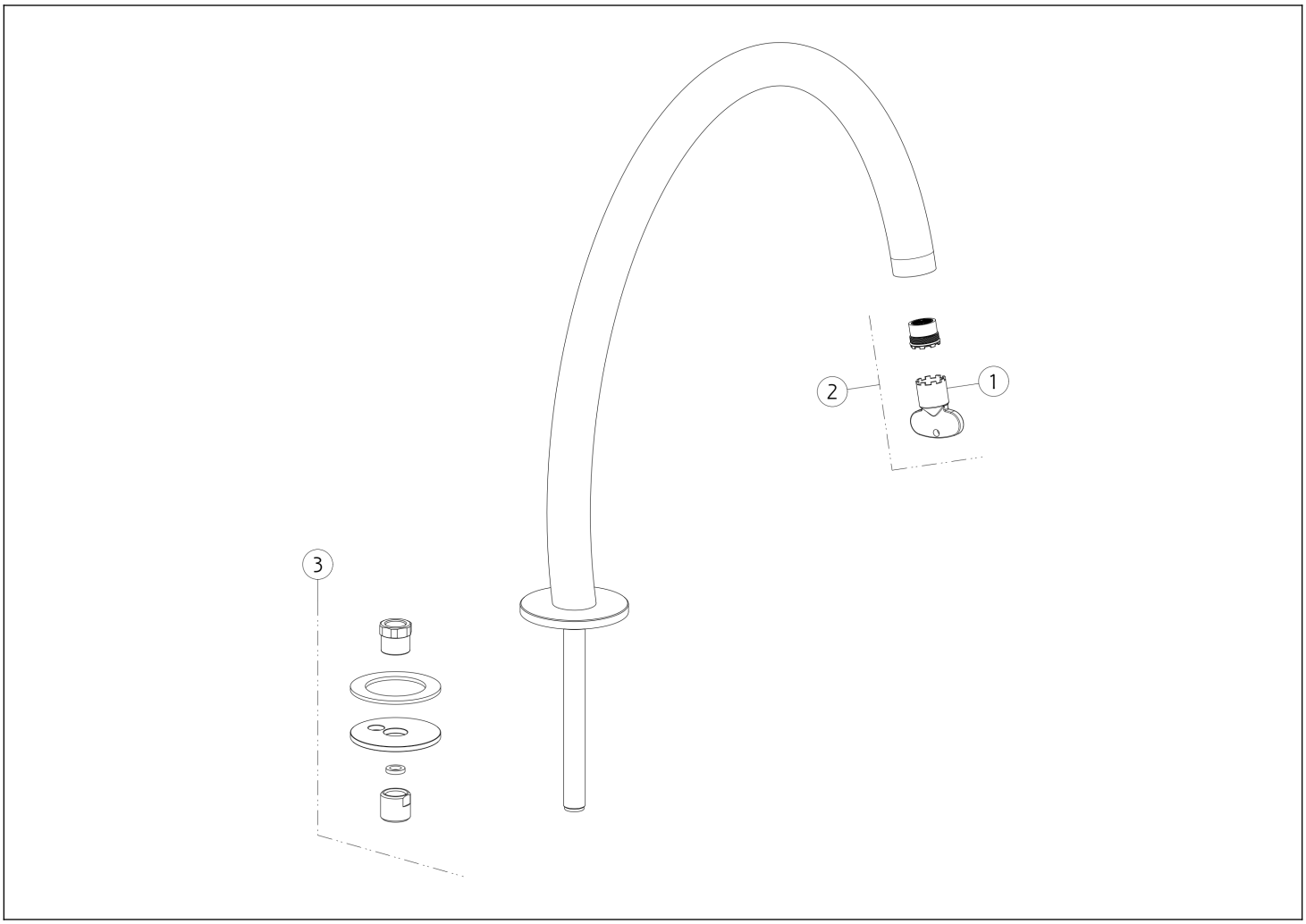

N°	Code	Description
1	SP00504	KEY
2	SP01608	AERATOR

N°	Code	Description
3	SP04137	FIXING KIT

Gessi S.p.A. Parco Gessi, 13037 Serravalle Sesia (Vercelli) Italy Tel. +39 0163 454111 Fax. +39 0163 453150 - www.gessi.com - gessi@gessi.it This drawing, as required by law, may not be made public or reproduced without the written authorization of GESSI S.p.A. Copyright GESSI S.p.A.