GESSI

66036

GPF66036000000G000

ORIGINI

validity date
≥ 11/2022



External parts wall-mounted two-ways shower mixer, with diverter, water outlet and hand shower hook. Can be combined with inserts with different finishes: art. 66600 and art. 66602.

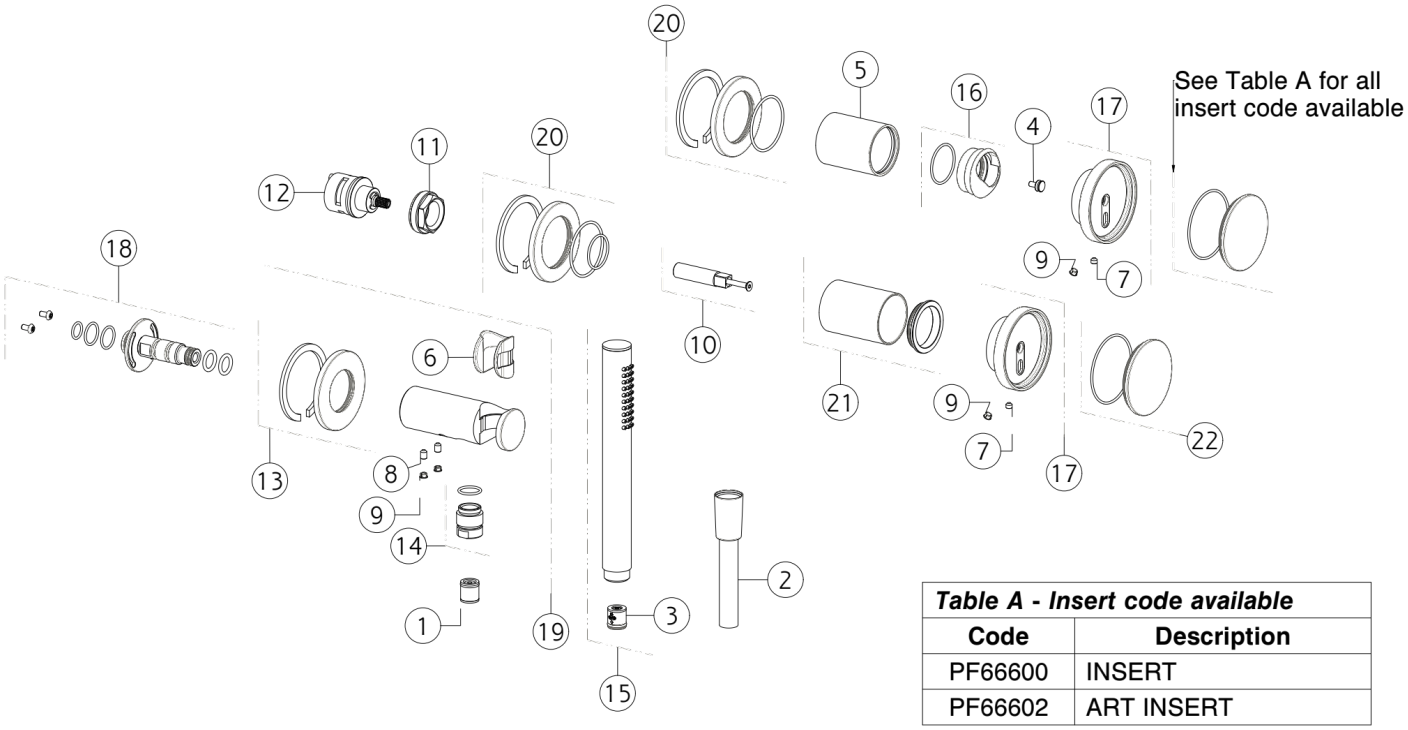

Table A - Insert code available	
Code	**Description**
PF66600	INSERT
PF66602	ART INSERT

N°	Code	Description
1	SP00014	NON RETURN VALVE
2	PF01637	HOSE
3	SP01634	FLOW REGOLATOR
4	SP04110	SPACER
5	SP03248	FINISHING BUSHING
6	SP01823	BUSH
7	SP00137	SCREW
8	SP00864	SCREW
9	SP00002	SCREW COVER
10	SP04103	EXTENSION
11	SP01762	FIXING RING NUT

N°	Code	Description
12	SP01758	DIVERTER
13	SP03337	COVER
14	SP01008	NIPPLE
15	PF14371	HANDSHOWER
16	SP03274	FINISHING RING NUT
17	SP04094	HANDLE
18	SP03332	JOINT
19	SP04104	CONNECTION WATER OUTLET WITH FIXED HOOK
20	SP03230	COVER
21	SP04105	COVER
22	SP04598	INSERT

Gessi S.p.A. Parco Gessi, 13037 Serravalle Sesia (Vercelli) Italy Tel. +39 0163 454111 Fax. +39 0163 453150 - www.gessi.com - gessi@gessi.it This drawing, as required by law, may not be made public or reproduced without the written authorization of GESSI S.p.A. Copyright GESSI S.p.A.