GESSI

66043

GPF66043000000G000

ORIGINI

validity date
≥ 04/2023



Three-holes bath mixer with separate control, diverter, 1,50 m flexible hose and antilimestone handshower. Can be combined withinserts with different finishes: art. 66600 and art. 66602.

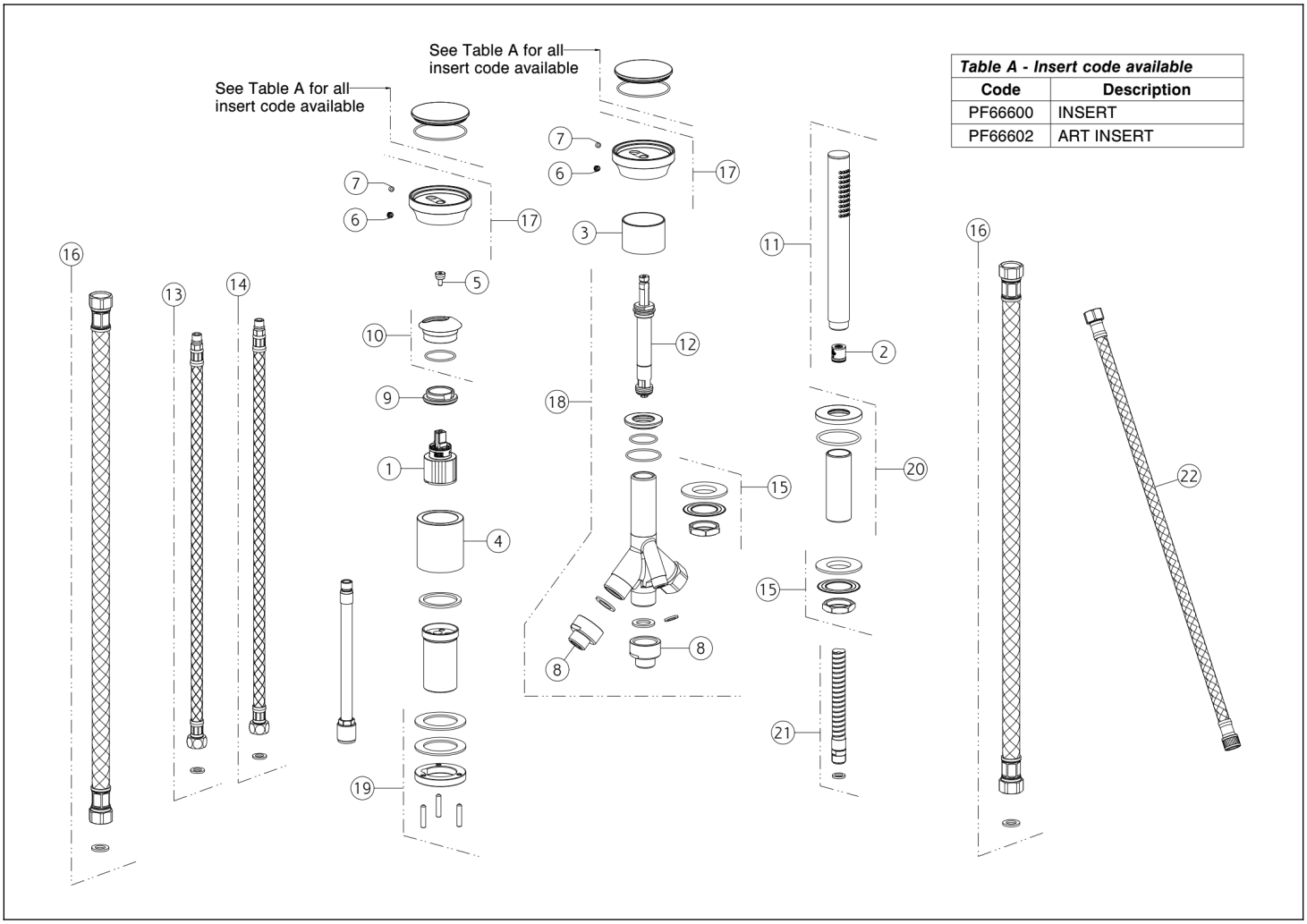

N°	Code	Description
1	SP01605	CARTRIDGE
2	SP01634	FLOW REGOLATOR
3	SP04132	EXTENSION
4	SP04133	FINISHING BUSHING
5	SP04110	SPACER
6	SP00002	SCREW COVER
7	SP00137	SCREW
8	SP01226	NIPPLE
9	SP01731	FIXING RING NUT
10	SP04111	FINISHING RING NUT
11	PF14371	HANDSHOWER

N°	Code	Description
12	SP04134	DIVERTER
13	SP00209	RED SUPPLY HOSE
14	SP00208	BLU SUPPLY HOSE
15	SP01222	FIXING SET
16	SP01716	HOSE
17	SP04109	HANDLE
18	SP04135	DIVERTER
19	SP01801	FIXING SET
20	SP03254	SHOWER HOLDER
21	SP01224	HOSE
22	SP01228	HOSE

Gessi S.p.A. Parco Gessi, 13037 Serravalle Sesia (Vercelli) Italy Tel. +39 0163 454111 Fax. +39 0163 453150 - www.gessi.com - gessi@gessi.it This drawing, as required by law, may not be made public or reproduced without the written authorization of GESSI S.p.A. Copyright GESSI S.p.A.