GESSI

66100

GPF66610000000G000

validity date
≥ 02/2023



ORIGINI

Separate control. Can be combined with inserts with different finishes: art. 66600 and art. 66602.

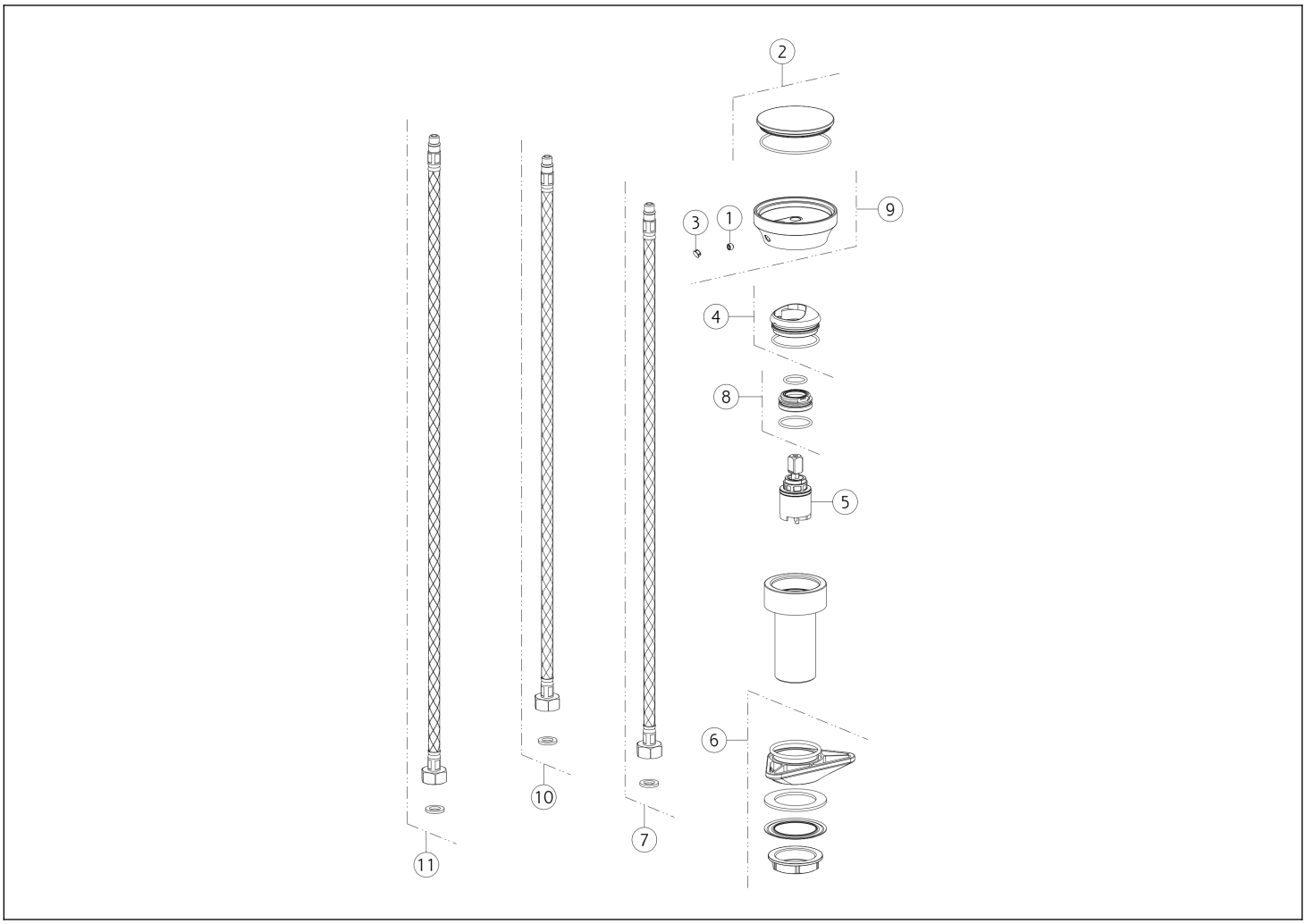

N°	Code	Description
1	SP00137	GRUB SCREW
2	SP04598	INSERT
3	SP00002	SCREW COVER
4	SP02305	FINISHING RING NUT
5	SP01700	CARTRIDGE
6	SP01250	FIXING KIT

N°	Code	Description
7	SP01285	RED SUPPLY HOSE
8	SP01278	FIXING RING NUT
9	SP04109	HANDLE
10	SP01284	BLUE SUPPLY HOSE
11	SP02916	HOSE

Gessi S.p.A. Parco Gessi, 13037 Serravalle Sesia (Vercelli) Italy Tel. +39 0163 454111 Fax. +39 0163 453150 - www.gessi.com - gessi@gessi.it This drawing, as required by law, may not be made public or reproduced without the written authorization of GESSI S.p.A. Copyright GESSI S.p.A.