GESSI

66102

GPF6610200000G000

TONDO

validity date
≥ 02/2023



Wall-mounted medium spout basin

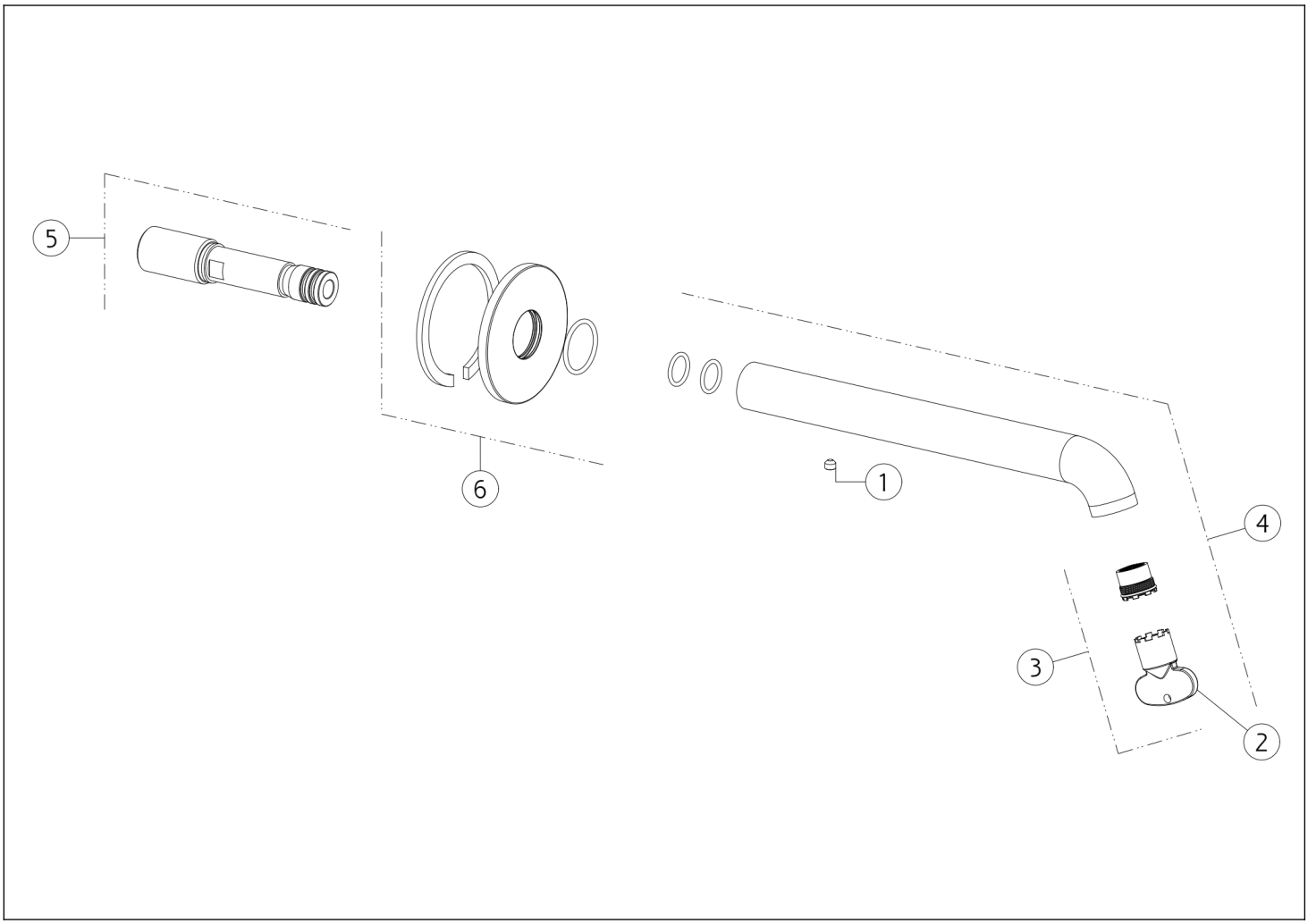

N°	Code	Description
1	SP00137	SCREW
2	SP00504	SPECIAL TOOL
3	SP01608	AERATOR

N°	Code	Description
4	SP04096	COMPLETE SPOUT
5	SP03548	JOINT
6	SP04097	COVER

Gessi S.p.A. Parco Gessi, 13037 Serravalle Sesia (Vercelli) Italy Tel. +39 0163 454111 Fax. +39 0163 453150 - www.gessi.com - gessi@gessi.it This drawing, as required by law, may not be made public or reproduced without the written authorization of GESSI S.p.A. Copyright GESSI S.p.A.