GESSI

66103

GPF6610300000G000

TONDO

validity date
≥ 12/2022



Wall-fixing bath spout

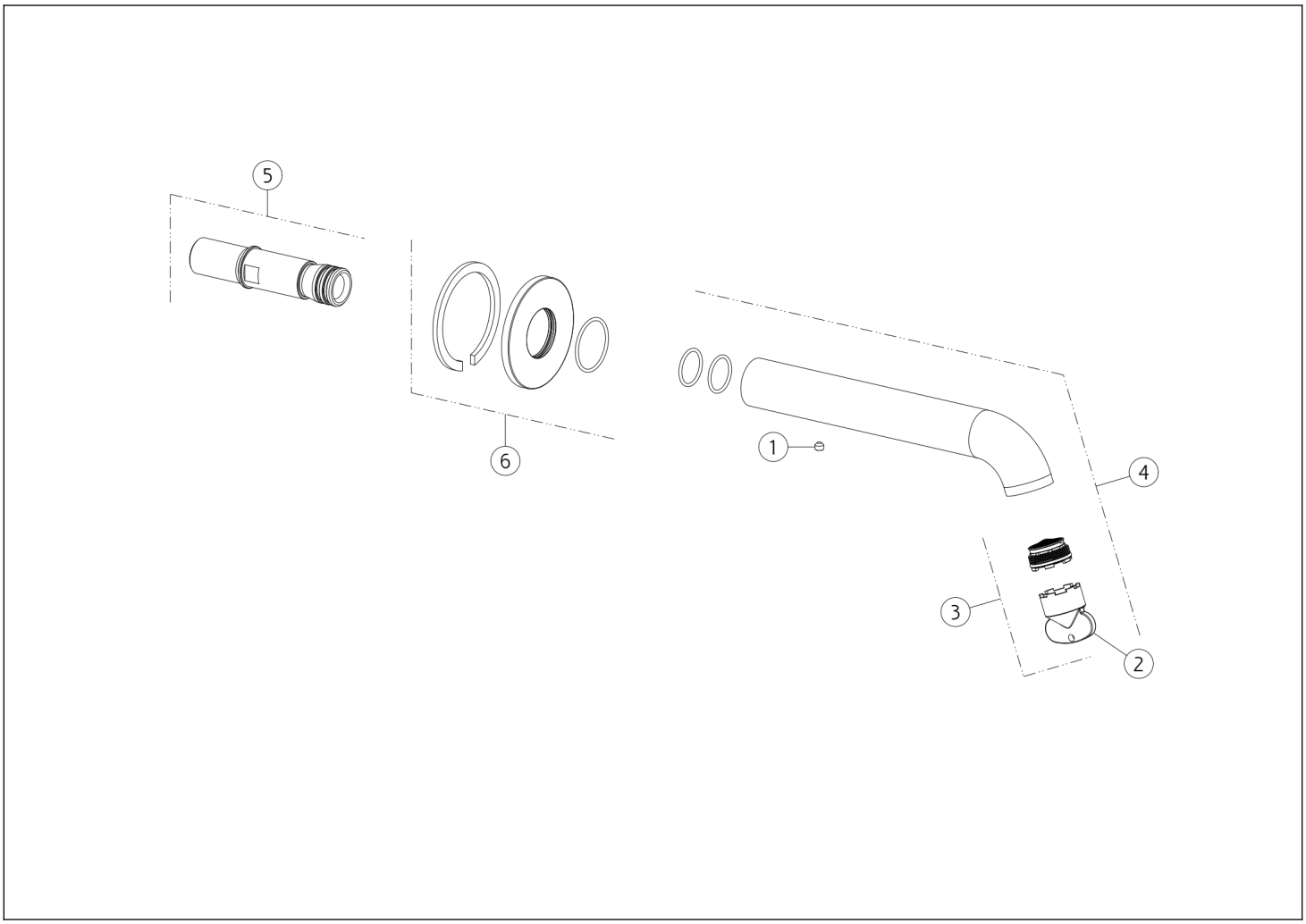

N°	Code	Description
1	SP00137	GRUB SCREW
2	SP00151	KEY
3	SP01717	AERATOR

N°	Code	Description
4	SP04098	COMPLETE SPOUT
5	SP05510	JOINT
6	SP04100	ROSETTE

Gessi S.p.A. Parco Gessi, 13037 Serravalle Sesia (Vercelli) Italy Tel. +39 0163 454111 Fax. +39 0163 453150 - www.gessi.com - gessi@gessi.it This drawing, as required by law, may not be made public or reproduced without the written authorization of GESSI S.p.A. Copyright GESSI S.p.A.