GESSI

66156

GPF6615600000G000

TONDO

validity date
≥ 05/2025



Wall-mounted adjustable headshower.

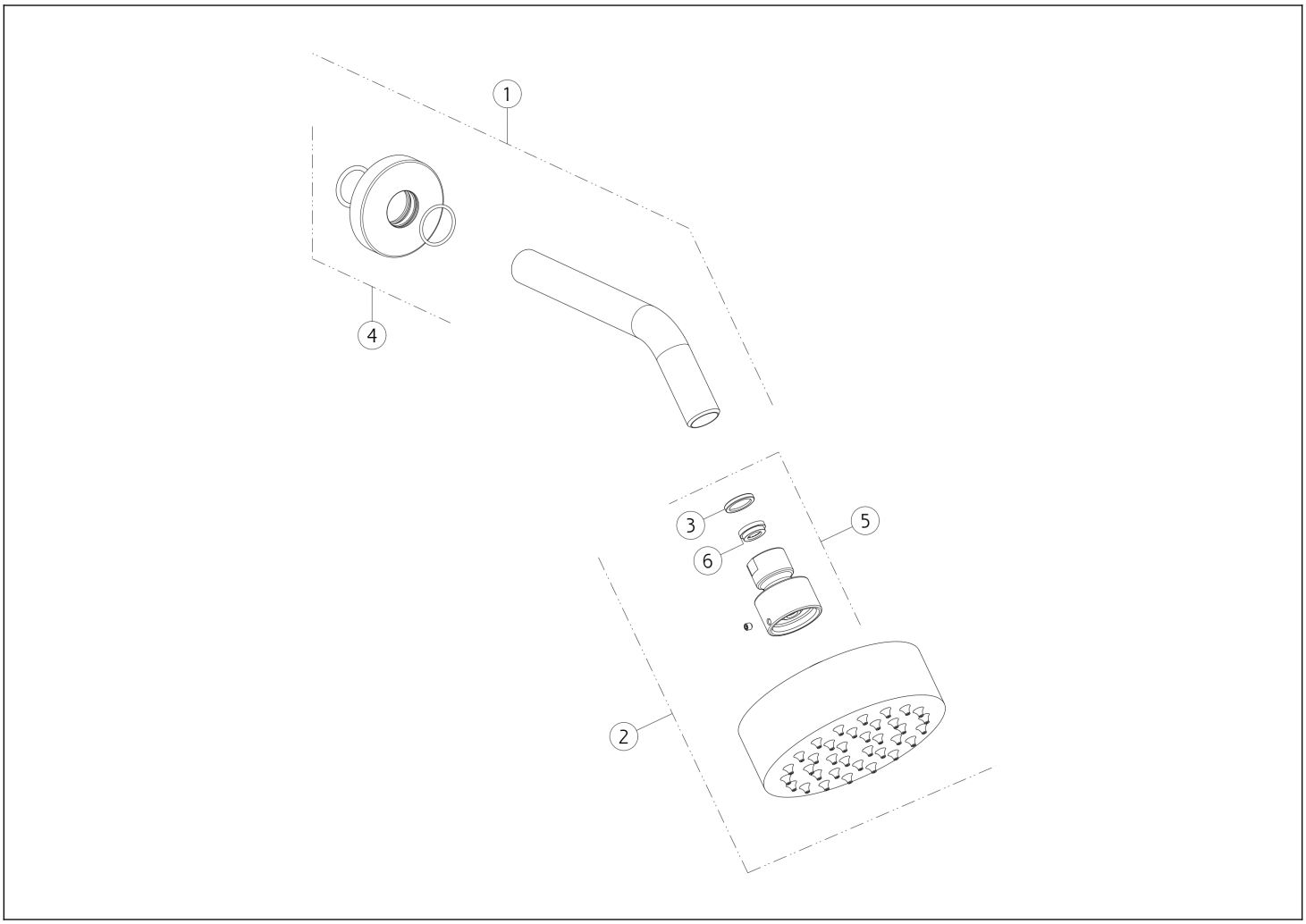

N°	Code	Description
1	SP04774	SHOWER ARM
2	SP05616	SHOWERHEAD
3	SP04574	FILTER GASKET

N°	Code	Description
4	SP05065	ROSETTE
5	SP00244	JOINT
6	SP02191	FLOW LIMITING VALVE

Gessi S.p.A. Parco Gessi, 13037 Serravalle Sesia (Vercelli) Italy Tel. +39 0163 454111 Fax. +39 0163 453150 - www.gessi.com - gessi@gessi.it This drawing, as required by law, may not be made public or reproduced without the written authorization of GESSI S.p.A. Copyright GESSI S.p.A.