GESSI

66161

GPF66616100000G000

ORIGINI

validity date
≥ 04/2023



Water outlet with handshower support. Can be combined with inserts with different finishes: art. 66600 and art. 66602.

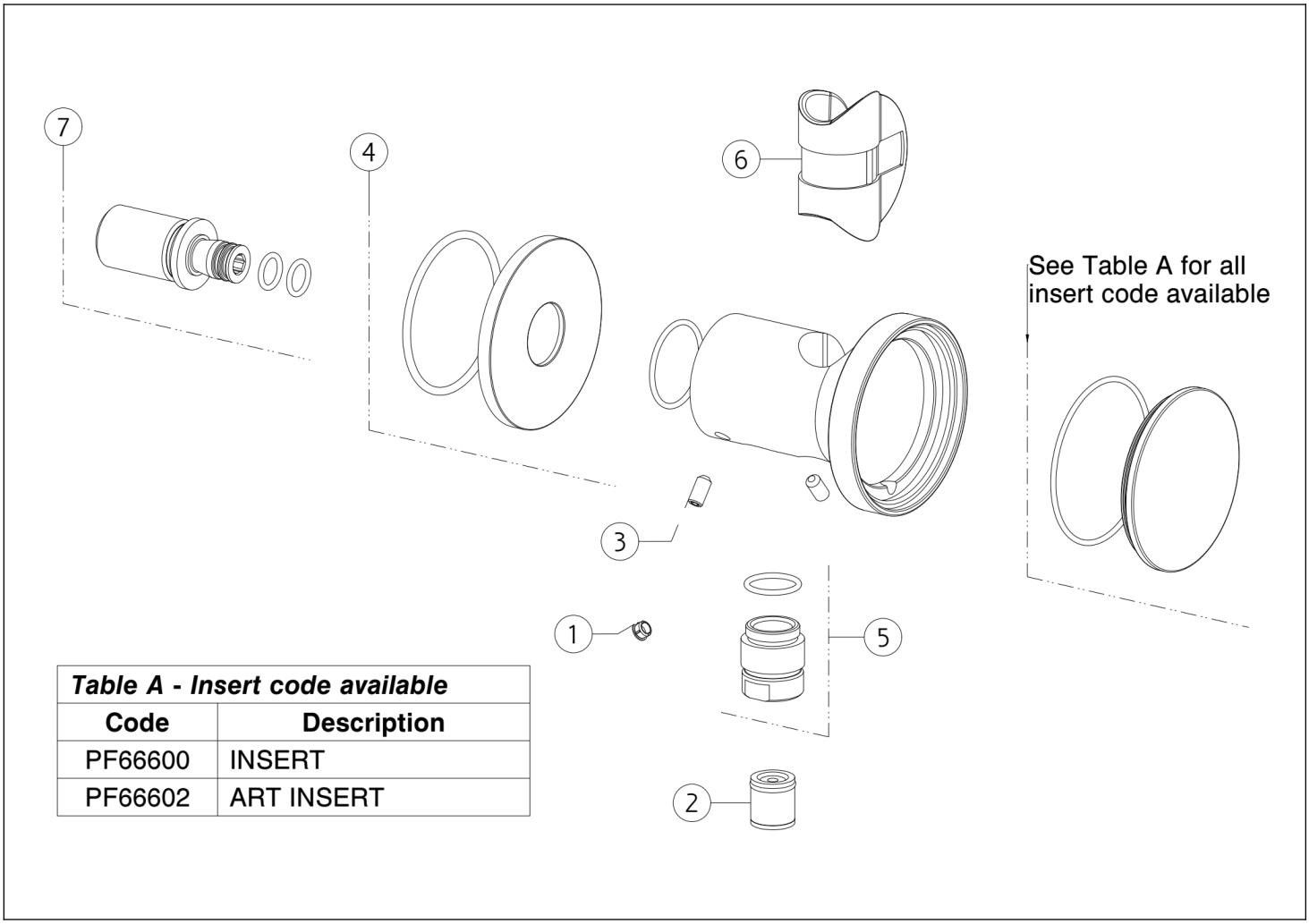

Table A - Insert code available	
Code	**Description**
PF66600	INSERT
PF66602	ART INSERT

N°	Code	Description
1	SP00002	SCREW COVER
2	SP00014	NON RETURN VALVE
3	SP01352	SCREW
4	SP03523	COVER

N°	Code	Description
5	SP01008	NIPPLE
6	SP04141	BUSH
7	SP01816	NIPPLE

Gessi S.p.A. Parco Gessi, 13037 Serravalle Sesia (Vercelli) Italy Tel. +39 0163 454111 Fax. +39 0163 453150 - www.gessi.com - gessi@gessi.it This drawing, as required by law, may not be made public or reproduced without the written authorization of GESSI S.p.A. Copyright GESSI S.p.A.