GESSI

66338

GPF6633800000G000

validity date
≥ 06/2023



ORIGINI

External parts for wall-mounted thermostatic mixer. Vertical/horizontal setting up with four separate exits. Can be combined with inserts with different finishes: art. 66600 and art. 66602.

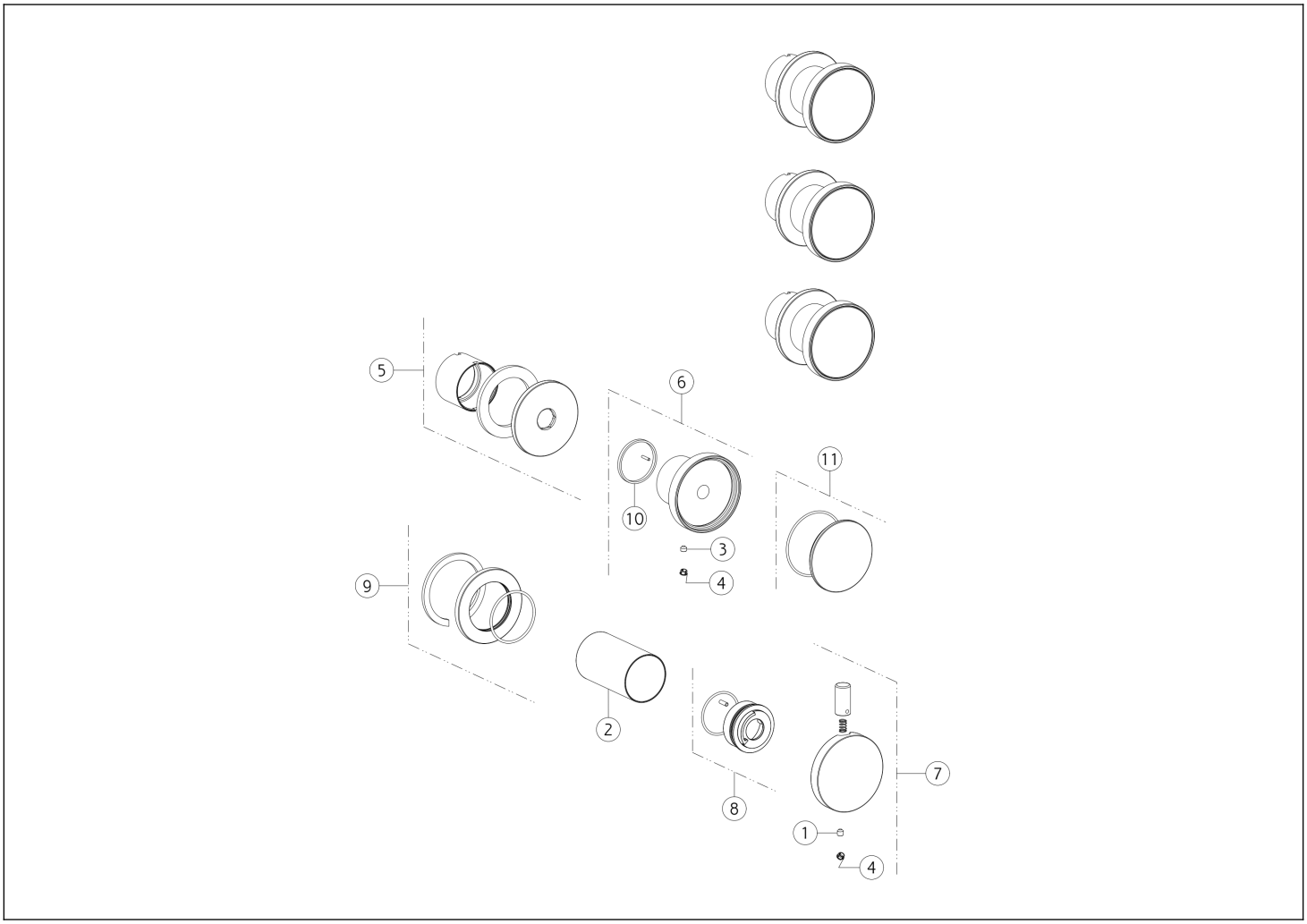

N°	Code	Description
1	SP00610	SCREW
2	SP04168	FINISHING BUSHING
3	SP00137	SCREW
4	SP00002	SCREW COVER
5	SP04161	COVER
6	SP04167	HANDLE

N°	Code	Description
7	SP04169	HANDLE
8	SP01781	INDICATOR RING
9	SP03230	COVER
10	SP01737	ANTIFRICTION RING
11	SP04598	INSERT

Gessi S.p.A. Parco Gessi, 13037 Serravalle Sesia (Vercelli) Italy Tel. +39 0163 454111 Fax. +39 0163 453150 - www.gessi.com - gessi@gessi.it This drawing, as required by law, may not be made public or reproduced without the written authorization of GESSI S.p.A. Copyright GESSI S.p.A.