GESSI

70042

GPF7004200000G000

TONDO

validity date
≥ 08/2023



Sliding rail with water outlet, antilimestone handshower and 1,50 m flexible hose.

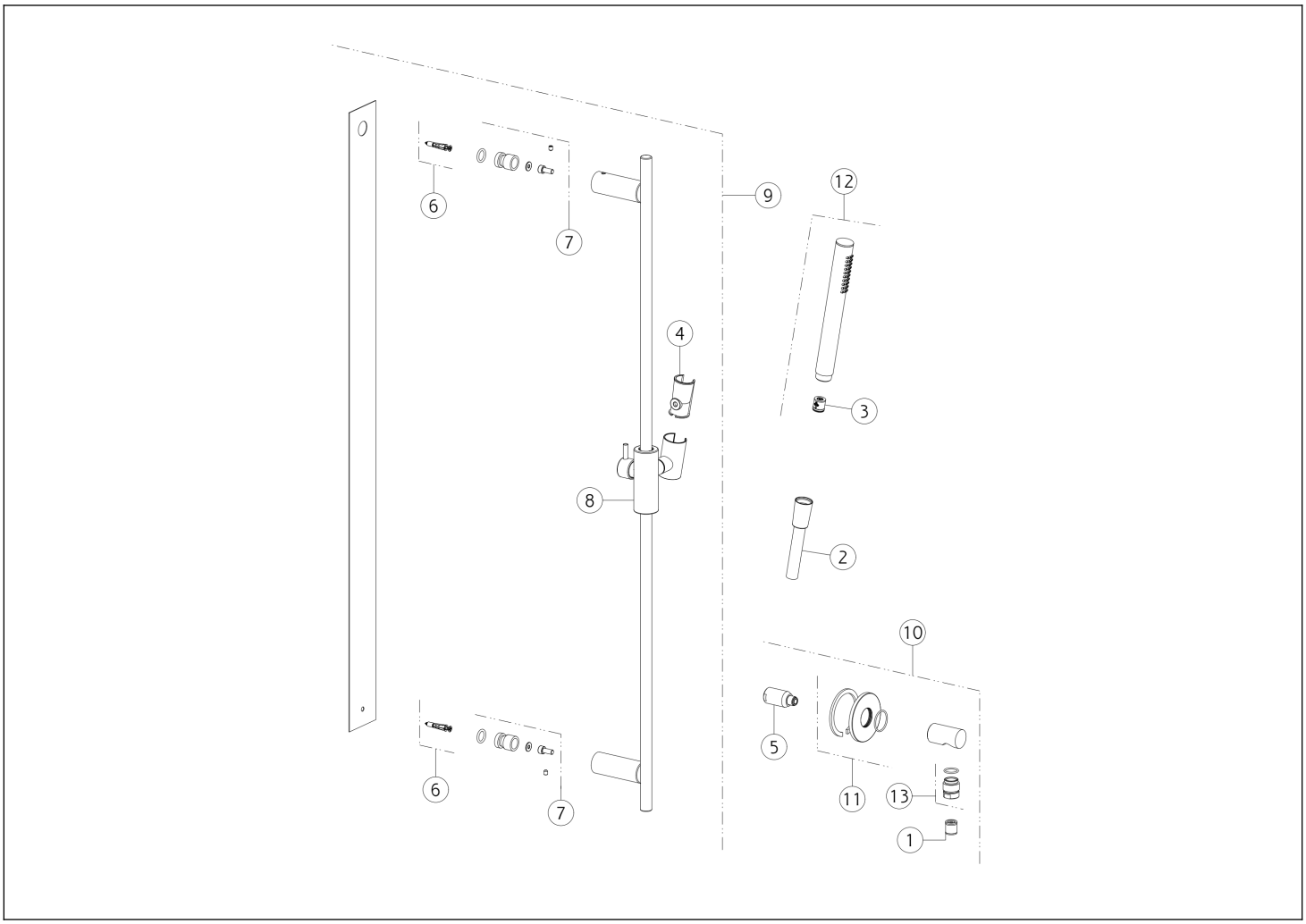

N°	Code	Description
1	SP00014	NON RETURN VALVE
2	PF01637	HOSE
3	SP01634	FLOW LIMITING VALVE
4	SP03468	HOLDER
5	SP04472	NIPPLE
6	SP03514	FIXING KIT
7	SP01760	FIXING KIT

N°	Code	Description
8	SP04461	SLIDER
9	PF70044	SLIDING RAIL
10	PF63469	WATER OUTLET
11	SP03989	ROSETTE
12	PF14371	HANDSHOWER
13	SP01008	NIPPLE

 This drawing, as required by law, may not be made public or reproduced without the written authorization of GESSI S.p.A. Copyright GESSI S.p.A.