GESSI

70045

GPF7004500000G000

TONDO

validity date
≥ 01/2024



Sliding rail with antilimestone handshower, 1,50 m flexible hose.

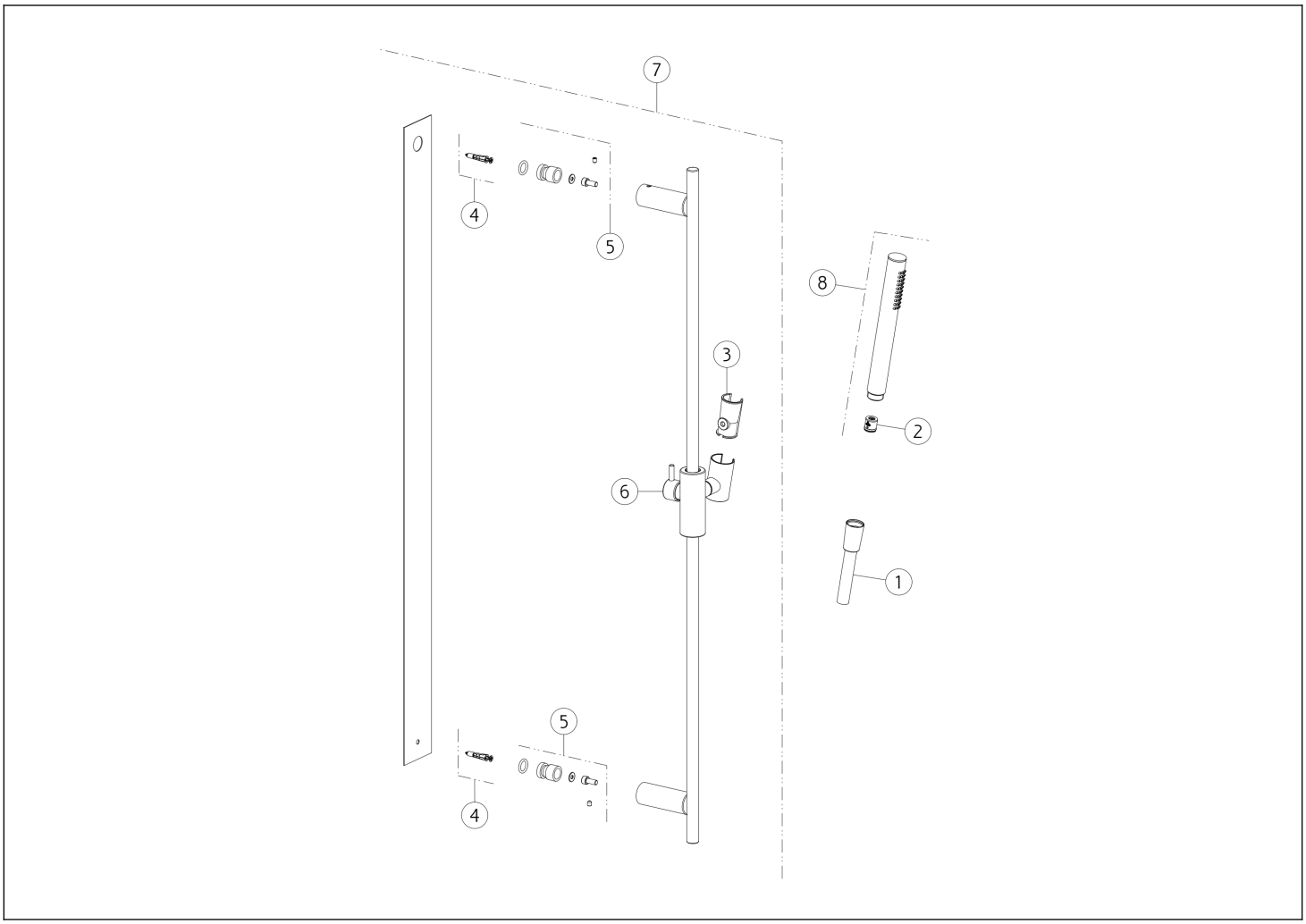

N°	Code	Description
1	PF01637	HOSE
2	SP01634	FLOW REGOLATOR
3	SP03468	SUPPORT
4	SP03514	FIXING SET

N°	Code	Description
5	SP01760	FIXING SET
6	SP04461	SLIDING SUPPORT
7	PF70044	SLIDING RAIL
8	PF14371	HANDSHOWER

Gessi S.p.A. Parco Gessi, 13037 Serravalle Sesia (Vercelli) Italy Tel. +39 0163 454111 Fax. +39 0163 453150 - www.gessi.com - gessi@gessi.it This drawing, as required by law, may not be made public or reproduced without the written authorization of GESSI S.p.A. Copyright GESSI S.p.A.