GESSI

70107

GPF7010700000G000

HABITO

validity date
≥ 06/2023



Bidet mixer with waste and connecting flexibles. INTRECCIO

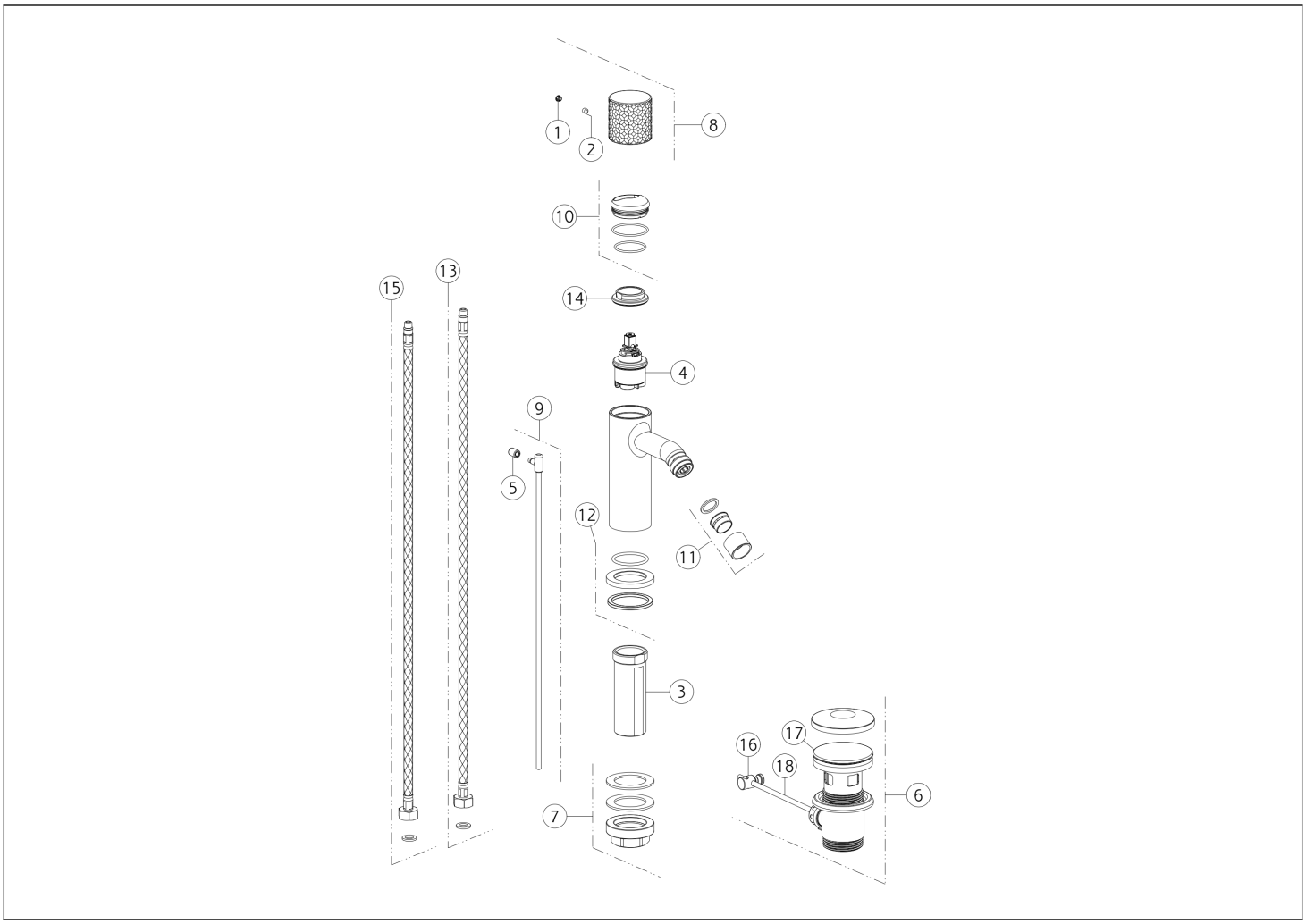

N°	Code	Description
1	SP00002	SCREW COVER
2	SP00610	SCREW
3	SP01701	SHANK
4	SP04305	CARTRIDGE
5	SP00927	KNOB
6	PF29264	BASIN WASTE
7	SP02370	FIXING SET
8	SP04207	HANDLE
9	SP02805	PULL ROD

N°	Code	Description
10	SP02305	FINISHING RING NUT
11	SP04101	COMPLETE AERATOR
12	SP04095	BASE
13	SP01591	BLU SUPPLY HOSE
14	SP00020	FIXING RING NUT
15	SP01590	RED SUPPLY HOSE
16	SP00219	JOINT
17	SP00772	PLUG
18	SP00218	ROD

Gessi S.p.A. Parco Gessi, 13037 Serravalle Sesia (Vercelli) Italy Tel. +39 0163 454111 Fax. +39 0163 453150 - www.gessi.com - gessi@gessi.it This drawing, as required by law, may not be made public or reproduced without the written authorization of GESSI S.p.A. Copyright GESSI S.p.A.