GESSI

70142

GPF7014200000G000

HABITO

validity date
≥ 07/2023



Sliding rail with water outlet, antilimestone handshower and 1,50 m flexible hose. INTRECCIO

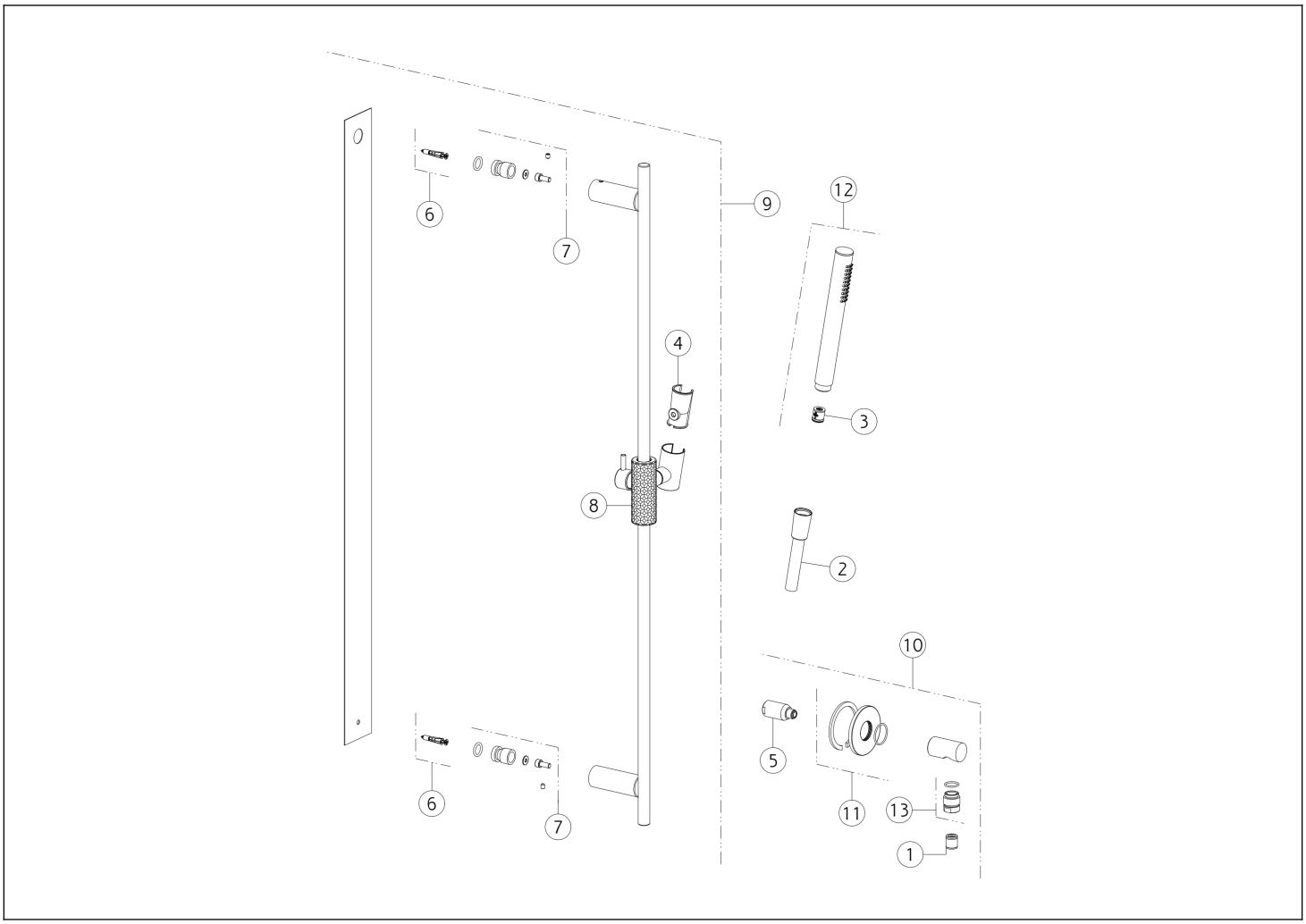

N°	Code	Description
1	SP00014	NON RETURN VALVE
2	PF01637	HOSE
3	SP01634	FLOW REGOLATOR
4	SP03468	SUPPORT
5	SP04472	NIPPLE
6	SP03514	FIXING SET
7	SP01760	FIXING SET

N°	Code	Description
8	SP04465	SLIDING SUPPORT
9	PF70144	SLIDING RAIL
10	PF63469	CONNECTION WATER OUTLET
11	SP03989	COVER
12	PF14371	HANDSHOWER
13	SP01008	NIPPLE

Gessi S.p.A. Parco Gessi, 13037 Serravalle Sesia (Vercelli) Italy Tel. +39 0163 454111 Fax. +39 0163 453150 - www.gessi.com - gessi@gessi.it This drawing, as required by law, may not be made public or reproduced without the written authorization of GESSI S.p.A. Copyright GESSI S.p.A.