GESSI

70188

GPF7018800000G000

HABITO

validity date
≥ 07/2023



External part for wall-mounted basin mixer. INTRECCIO

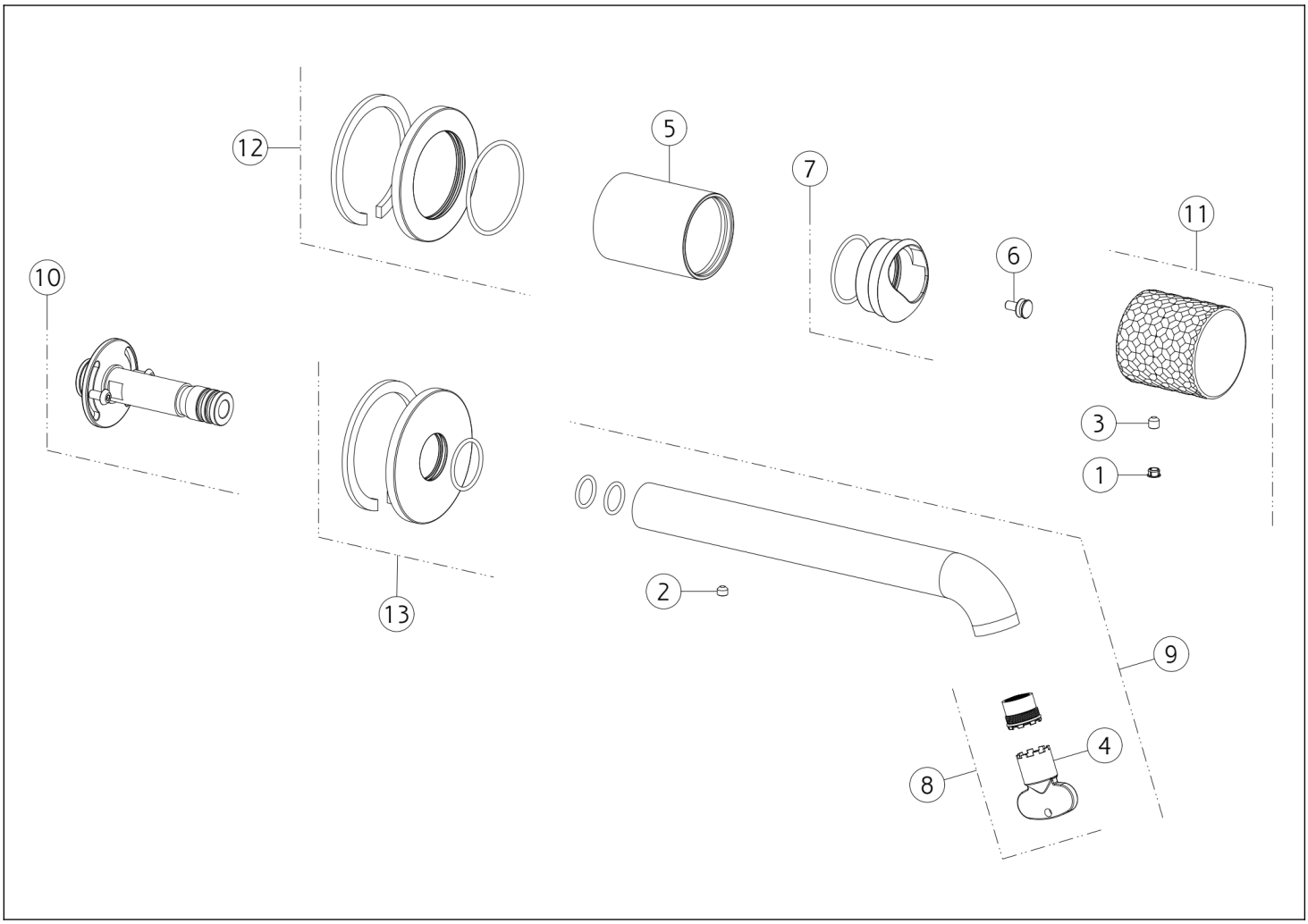

N°	Code	Description
1	SP00002	SCREW COVER
2	SP00137	SCREW
3	SP00610	SCREW
4	SP00504	SPECIAL TOOL
5	SP03248	FINISHING BUSHING
6	SP04110	SPACER
7	SP03274	FINISHING RING NUT

N°	Code	Description
8	SP01608	AERATOR
9	SP04096	COMPLETE SPOUT
10	SP03328	JOINT
11	SP04376	HANDLE
12	SP03230	COVER
13	SP04381	COVER

Gessi S.p.A. Parco Gessi, 13037 Serravalle Sesia (Vercelli) Italy Tel. +39 0163 454111 Fax. +39 0163 453150 - www.gessi.com - gessi@gessi.it This drawing, as required by law, may not be made public or reproduced without the written authorization of GESSI S.p.A. Copyright GESSI S.p.A.