GESSI

70301

GPF70301000000G000

HABITO

validity date
≥ 07/2023



Basin mixer with waste and connecting flexibles. TRAME

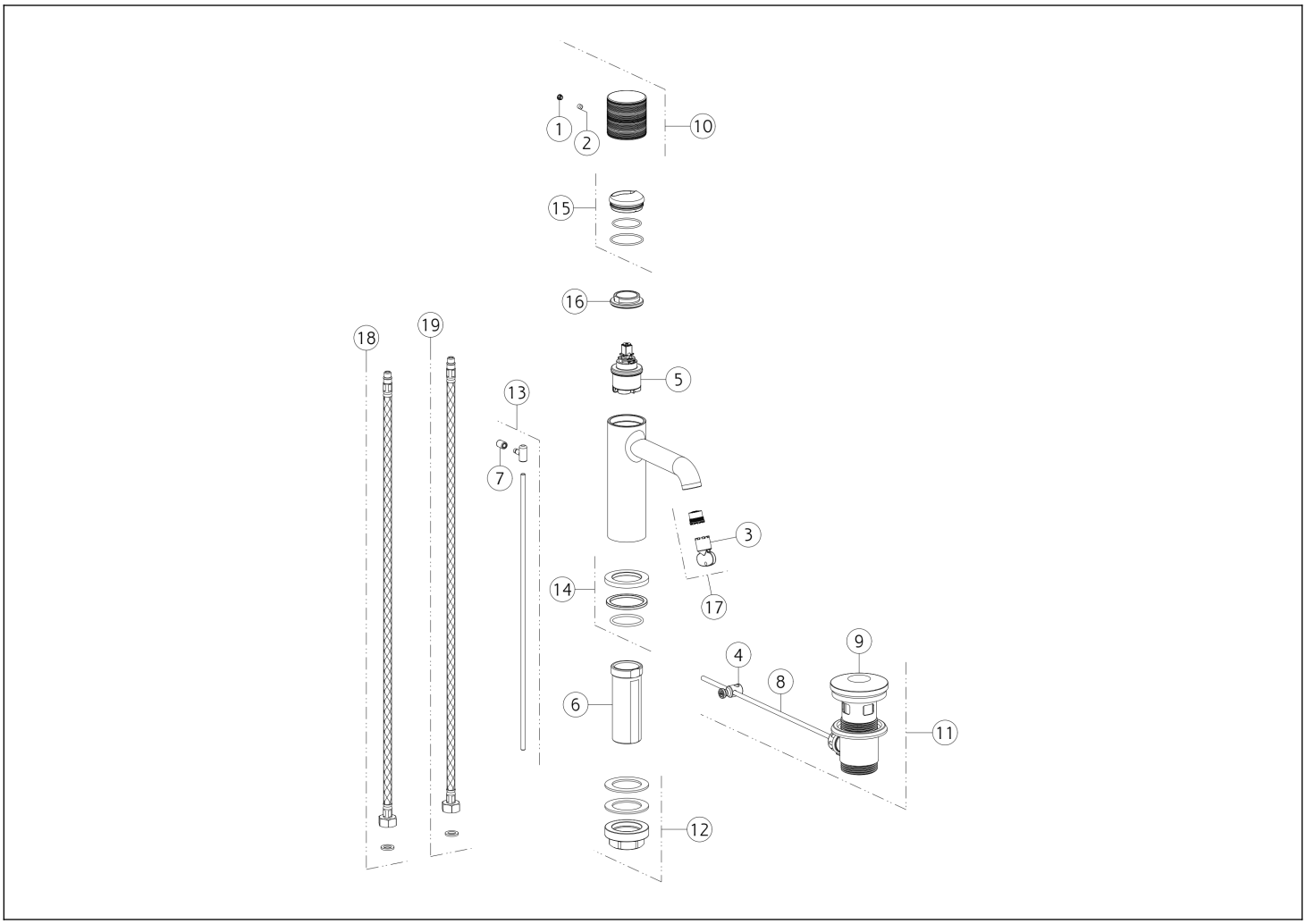

N°	Code	Description
1	SP00002	SCREW COVER
2	SP00137	GRUB SCREW
3	SP00504	KEY
4	SP00219	JOINT
5	SP04305	CARTRIDGE
6	SP01701	SHANK
7	SP00927	KNOB
8	SP00218	ROD
9	SP00772	WASTE COVER CAP
10	SP04208	HANDLE

N°	Code	Description
11	PF29263	BASIN WASTE
12	SP02370	FIXING KIT
13	SP02805	POP-UP WASTE ROD
14	SP04095	BASE PLATE
15	SP02305	FINISHING RING NUT
16	SP00020	FIXING RING NUT
17	SP01608	AERATOR
18	SP01590	RED SUPPLY HOSE
19	SP01591	BLUE SUPPLY HOSE

Gessi S.p.A. Parco Gessi, 13037 Serravalle Sesia (Vercelli) Italy Tel. +39 0163 454111 Fax. +39 0163 453150 - www.gessi.com - gessi@gessi.it This drawing, as required by law, may not be made public or reproduced without the written authorization of GESSI S.p.A. Copyright GESSI S.p.A.