GESSI

70303

GPF70303000000G000

HABITO

validity date
≥ 01/2024



High version basin mixer with waste and connecting flexibles. TRAME

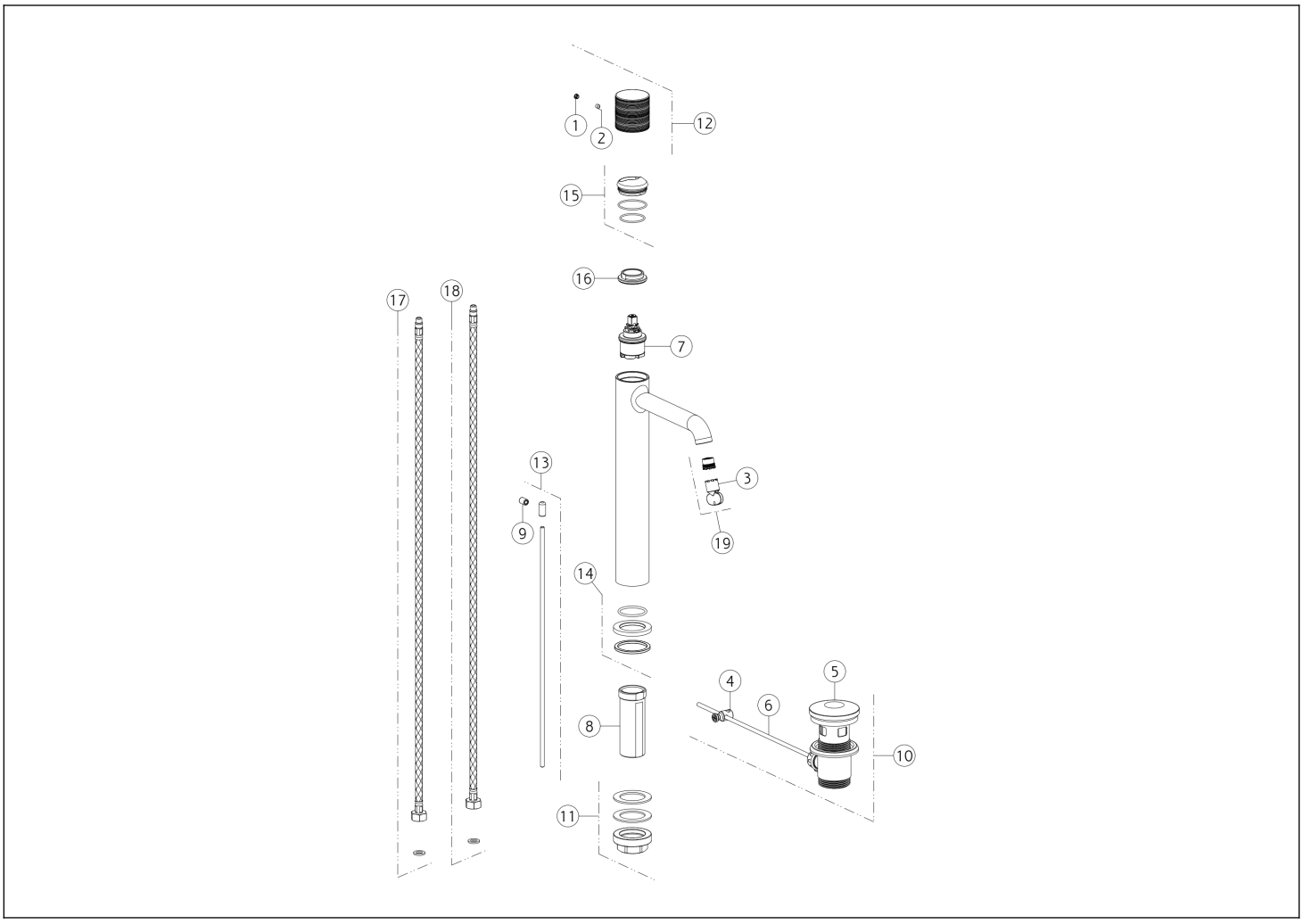

N°	Code	Description
1	SP00002	SCREW COVER
2	SP00137	SCREW
3	SP00504	SPECIAL TOOL
4	SP00219	JOINT
5	SP00772	PLUG
6	SP00218	ROD
7	SP04305	CARTRIDGE
8	SP01701	SHANK
9	SP00927	KNOB
10	PF29263	BASIN WASTE

N°	Code	Description
11	SP02370	FIXING SET
12	SP04208	HANDLE
13	SP02805	PULL ROD
14	SP04095	BASE
15	SP02305	FINISHING RING NUT
16	SP00020	FIXING RING NUT
17	SP01287	RED SUPPLY HOSE
18	SP01286	BLU SUPPLY HOSE
19	SP01608	AERATOR

Gessi S.p.A. Parco Gessi, 13037 Serravalle Sesia (Vercelli) Italy Tel. +39 0163 454111 Fax. +39 0163 453150 - www.gessi.com - gessi@gessi.it This drawing, as required by law, may not be made public or reproduced without the written authorization of GESSI S.p.A. Copyright GESSI S.p.A.