GESSI

70304

GPF7030400000G000

HABITO

validity date
≥ 06/2023



High version basin mixer without waste and connecting flexibles. TRAME

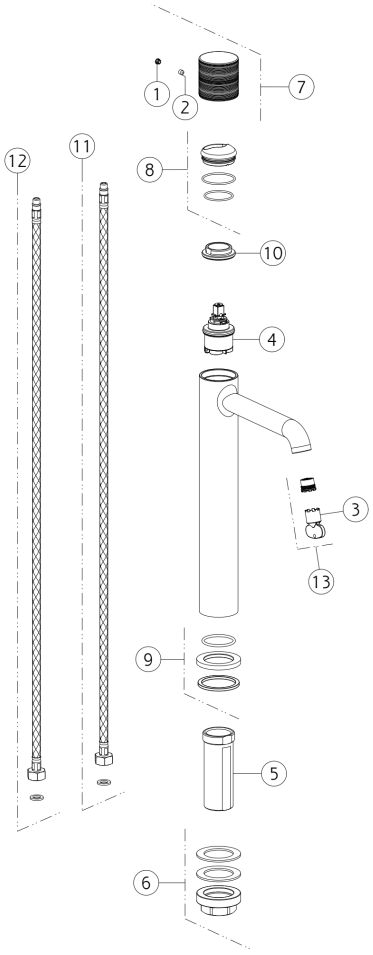

N°	Code	Description
1	SP00002	SCREW COVER
2	SP00137	SCREW
3	SP00504	SPECIAL TOOL
4	SP04305	CARTRIDGE
5	SP01701	SHANK
6	SP02370	FIXING SET
7	SP04208	HANDLE

N°	Code	Description
8	SP02305	FINISHING RING NUT
9	SP04095	BASE
10	SP00020	FIXING RING NUT
11	SP01286	BLU SUPPLY HOSE
12	SP01287	RED SUPPLY HOSE
13	SP01608	AERATOR

Gessi S.p.A. Parco Gessi, 13037 Serravalle Sesia (Vercelli) Italy Tel. +39 0163 454111 Fax. +39 0163 453150 - www.gessi.com - gessi@gessi.it This drawing, as required by law, may not be made public or reproduced without the written authorization of GESSI S.p.A. Copyright GESSI S.p.A.