GESSI

70305

GPF70305000000G000

HABITO

validity date
≥ 06/2023



Medium version basin mixer with waste and connecting flexibles. TRAME

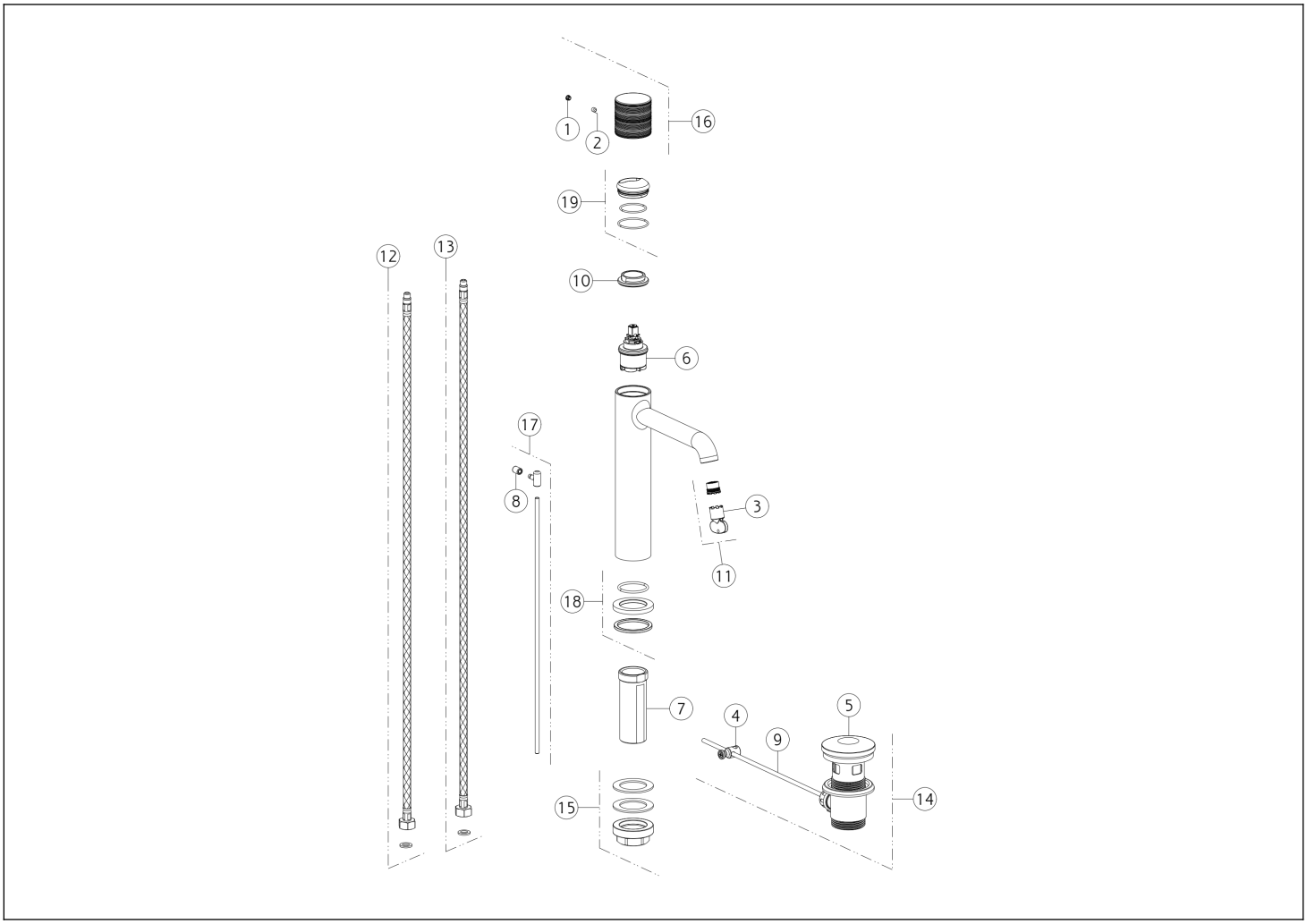

N°	Code	Description
1	SP00002	SCREW COVER
2	SP00137	SCREW
3	SP00504	SPECIAL TOOL
4	SP00219	JOINT
5	SP00772	PLUG
6	SP04305	CARTRIDGE
7	SP01701	SHANK
8	SP00927	KNOB
9	SP00218	ROD
10	SP00020	FIXING RING NUT

N°	Code	Description
11	SP01608	AERATOR
12	SP01287	RED SUPPLY HOSE
13	SP01286	BLU SUPPLY HOSE
14	PF29263	BASIN WASTE
15	SP02370	FIXING SET
16	SP04208	HANDLE
17	SP02805	PULL ROD
18	SP04095	BASE
19	SP02305	FINISHING RING NUT

Gessi S.p.A. Parco Gessi, 13037 Serravalle Sesia (Vercelli) Italy Tel. +39 0163 454111 Fax. +39 0163 453150 - www.gessi.com - gessi@gessi.it This drawing, as required by law, may not be made public or reproduced without the written authorization of GESSI S.p.A. Copyright GESSI S.p.A.