GESSI

70344

GPF7034400000G000

HABITO

validity date
≥ 06/2026



Sliding rail. TRAME

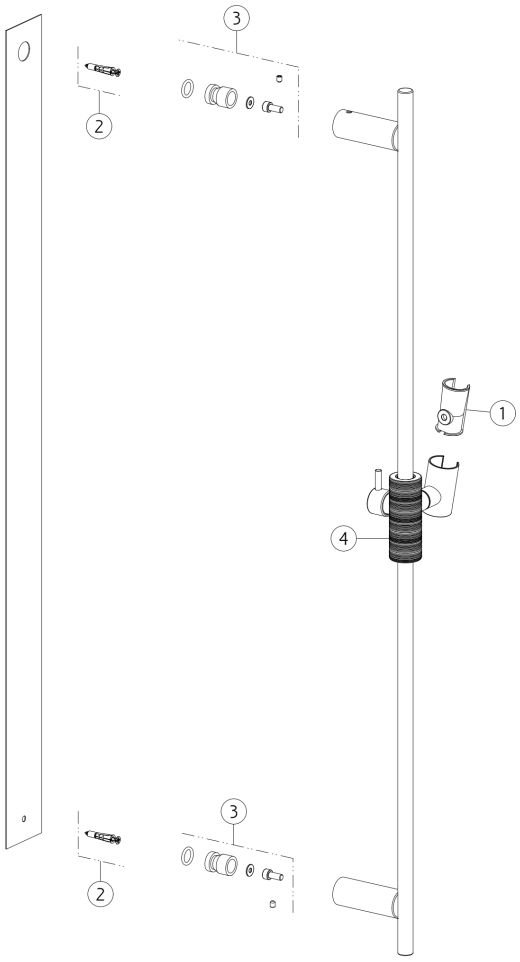

N°	Code	Description
1	SP03468	SUPPORT
2	SP03514	FIXING SET

N°	Code	Description
3	SP01760	FIXING SET
4	SP04464	SLIDING SUPPORT

Gessi S.p.A. Parco Gessi, 13037 Serravalle Sesia (Vercelli) Italy Tel. +39 0163 454111 Fax. +39 0163 453150 - www.gessi.com - gessi@gessi.it This drawing, as required by law, may not be made public or reproduced without the written authorization of GESSI S.p.A. Copyright GESSI S.p.A.