GESSI

70399

GPF7039900000G000

HABITO

validity date
≥ 07/2023



External part for wall-mounted one-way mixer. TRAME

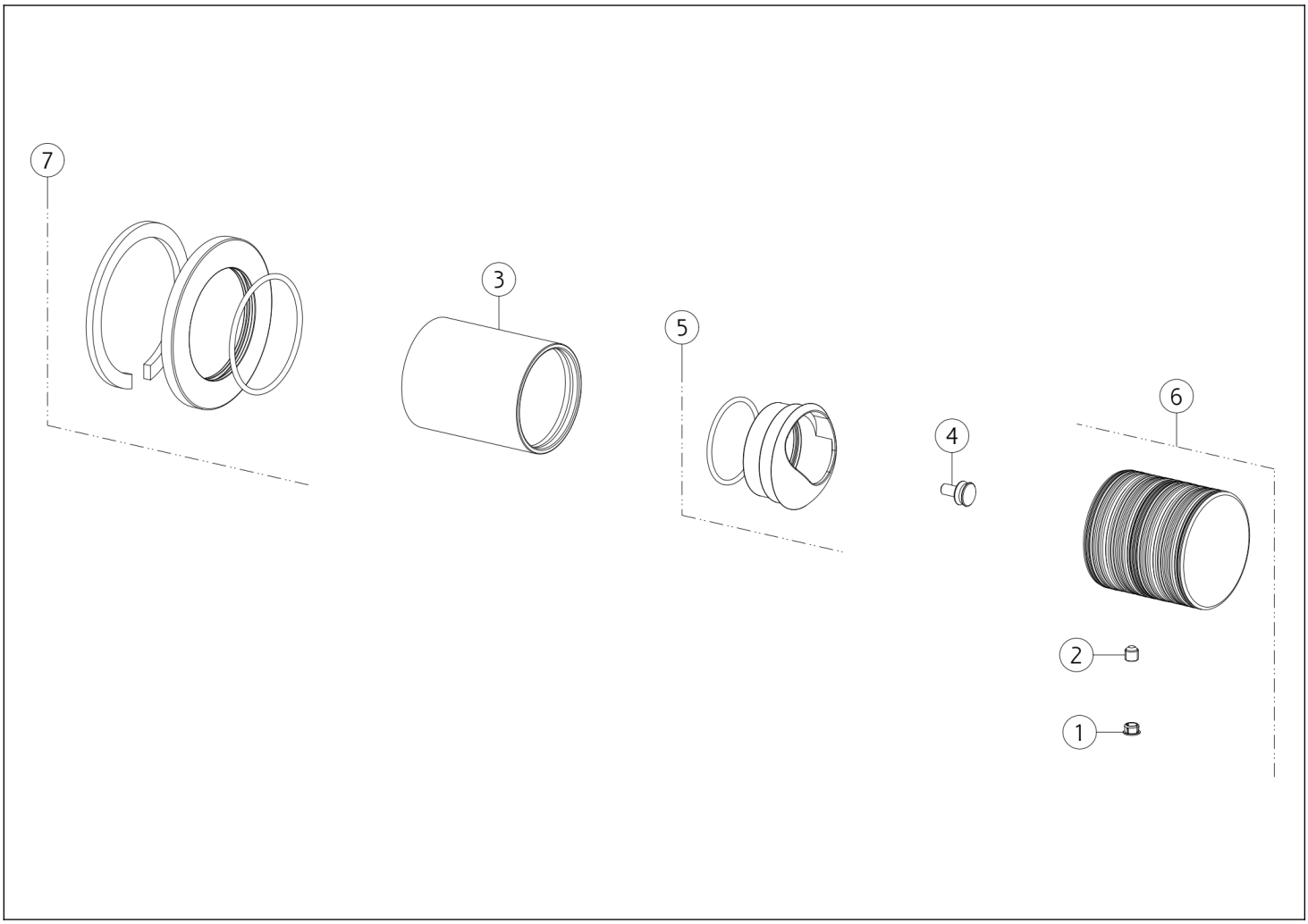

N°	Code	Description
1	SP00002	SCREW COVER
2	SP00610	SCREW
3	SP03248	FINISHING BUSHING
4	SP04110	SPACER

N°	Code	Description
5	SP03274	FINISHING RING NUT
6	SP04377	HANDLE
7	SP03230	COVER

Gessi S.p.A. Parco Gessi, 13037 Serravalle Sesia (Vercelli) Italy Tel. +39 0163 454111 Fax. +39 0163 453150 - www.gessi.com - gessi@gessi.it This drawing, as required by law, may not be made public or reproduced without the written authorization of GESSI S.p.A. Copyright GESSI S.p.A.