GESSI

70406

GPF7040600000G000

HABITO

validity date
≥ 11/2023



Medium version basin mixer without waste and connecting flexibles. CESELLO

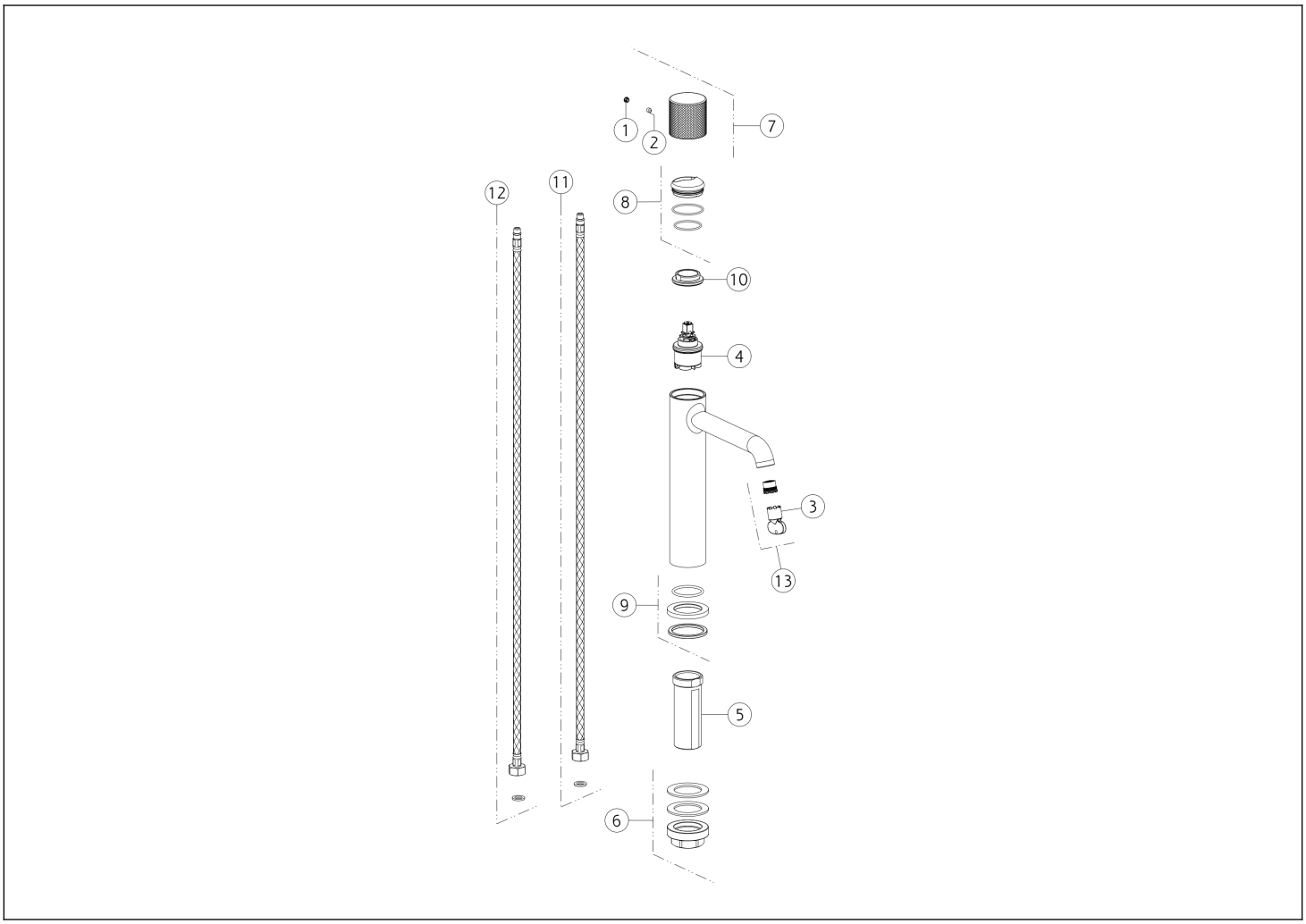

N°	Code	Description
1	SP00002	SCREW COVER
2	SP00137	SCREW
3	SP00504	SPECIAL TOOL
4	SP04305	CARTRIDGE
5	SP01701	SHANK
6	SP02370	FIXING SET
7	SP04209	HANDLE

N°	Code	Description
8	SP02305	FINISHING RING NUT
9	SP04095	BASE
10	SP00020	FIXING RING NUT
11	SP01286	BLU SUPPLY HOSE
12	SP01287	RED SUPPLY HOSE
13	SP01608	AERATOR

 This drawing, as required by law, may not be made public or reproduced without the written authorization of GESSI S.p.A. Copyright GESSI S.p.A.