GESSI

70579

GPF7057900000G000

validity date
≥ 12/2023



HABITO

External part wall-mounted two-ways shower mixer with diverter. RIGATO

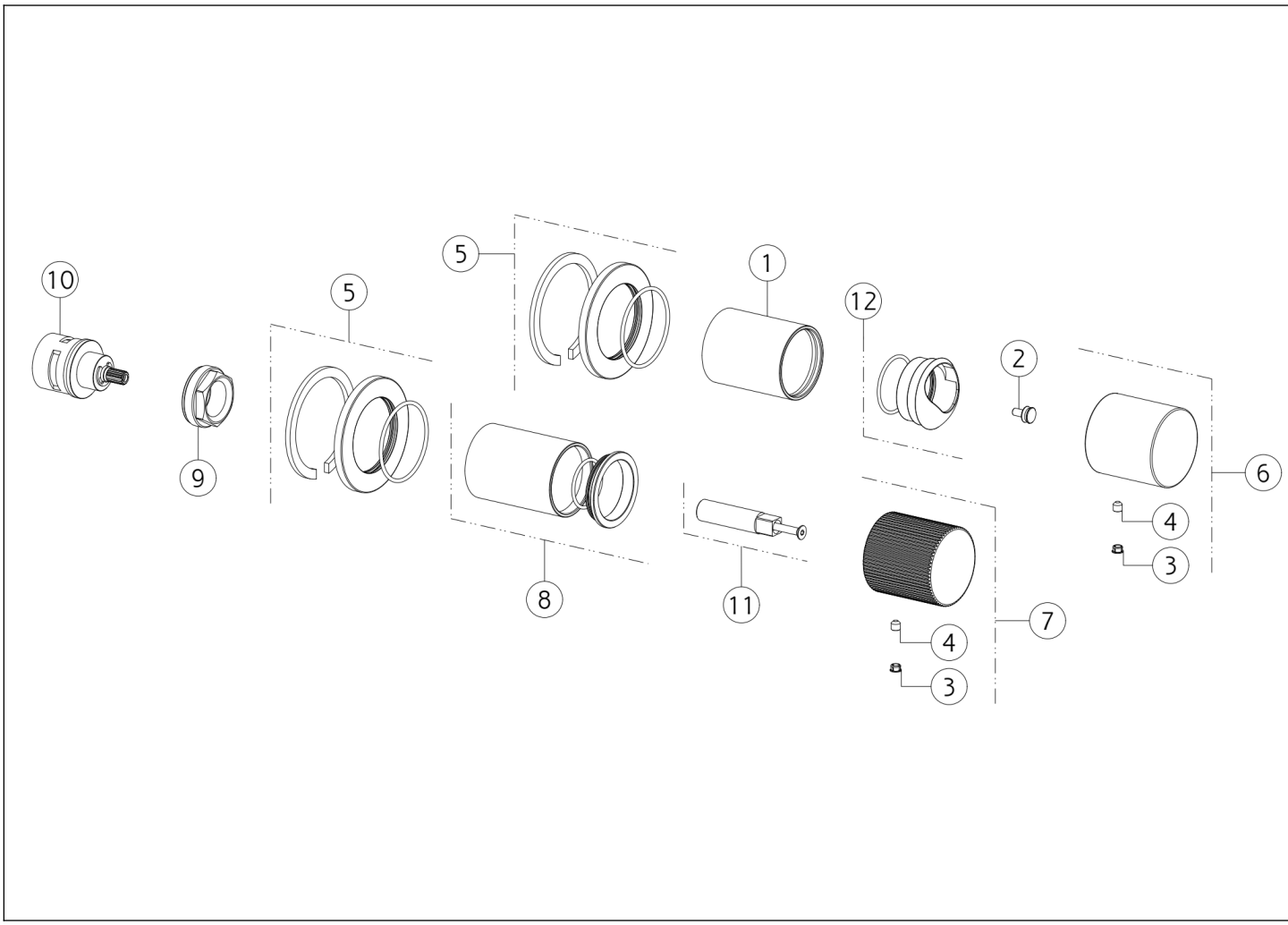

N°	Code	Description
1	SP03248	FINISHING BUSHING
2	SP04110	SPACER
3	SP00002	SCREW COVER
4	SP00610	SCREW
5	SP03230	COVER
6	SP04375	HANDLE

N°	Code	Description
7	SP04398	HANDLE
8	SP04105	BUSH
9	SP01762	FIXING RING NUT
10	SP01758	DIVERTER
11	SP04103	EXTENSION
12	SP03274	FINISHING RING NUT

Gessi S.p.A. Parco Gessi, 13037 Serravalle Sesia (Vercelli) Italy Tel. +39 0163 454111 Fax. +39 0163 453150 - www.gessi.com - gessi@gessi.it This drawing, as required by law, may not be made public or reproduced without the written authorization of GESSI S.p.A. Copyright GESSI S.p.A.