GESSI

70588

validity date
≥ 07/2023



GPF7058800000G000

HABITO

External part for wall-mounted basin mixer. RIGATO

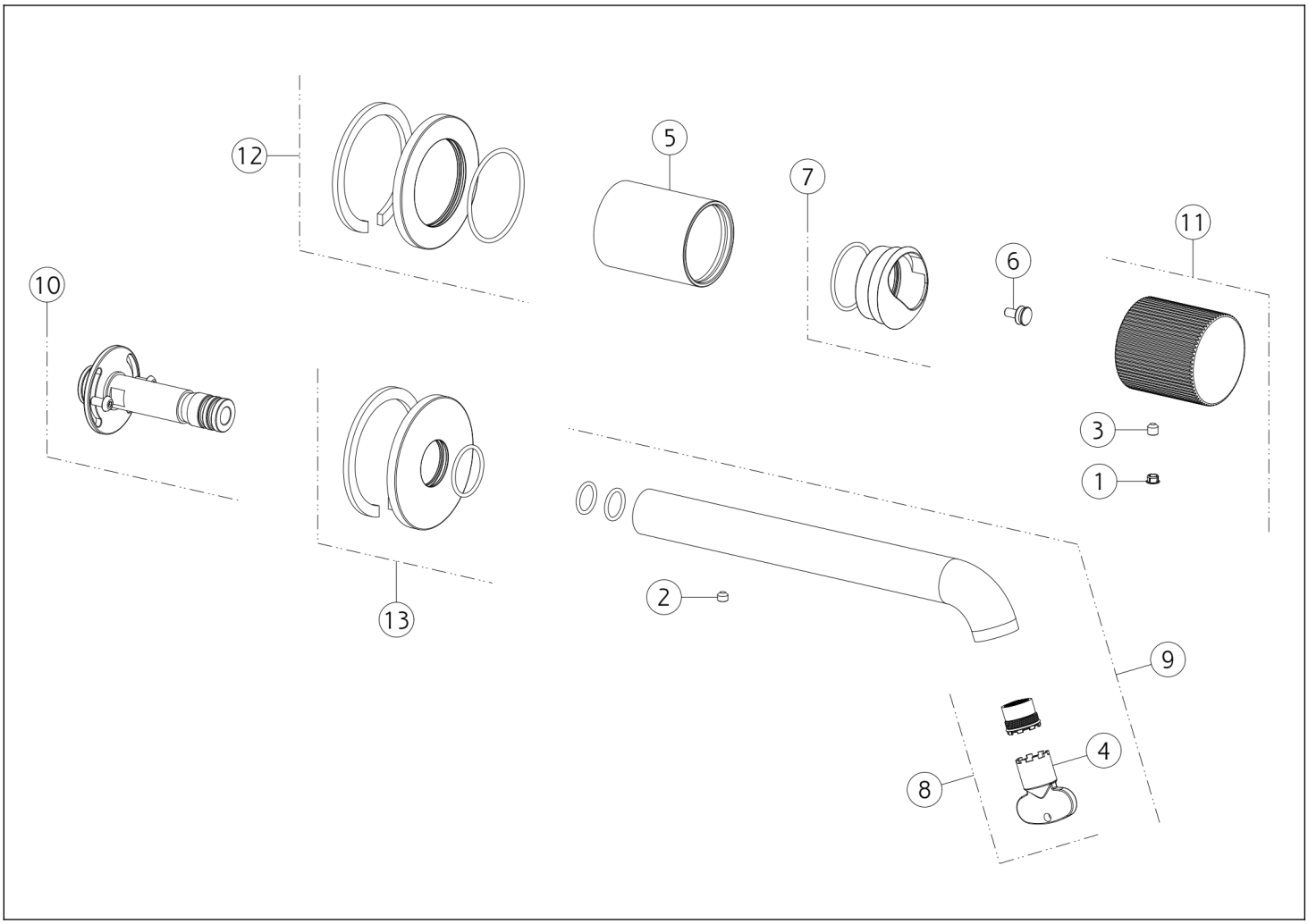

N°	Code	Description
1	SP00002	SCREW COVER
2	SP00137	GRUB SCREW
3	SP00610	GRUB SCREW
4	SP00504	KEY
5	SP03248	FINISHED BUSH
6	SP04110	SPACER
7	SP03274	FINISHING RING NUT

N°	Code	Description
8	SP01608	AERATOR
9	SP04096	COMPLETE SPOUT
10	SP03328	JOINT
11	SP04379	HANDLE
12	SP03230	ROSETTE
13	SP04381	ROSETTE

Gessi S.p.A. Parco Gessi, 13037 Serravalle Sesia (Vercelli) Italy Tel. +39 0163 454111 Fax. +39 0163 453150 - www.gessi.com - gessi@gessi.it This drawing, as required by law, may not be made public or reproduced without the written authorization of GESSI S.p.A. Copyright GESSI S.p.A.