GESSI

70638

GPF7063800000G000

HABITO

validity date
≥ 10/2023



External parts wall-mounted two-way shower mixer with diverter, water outlet, hand shower hook and hand shower.
DIAMANTATO

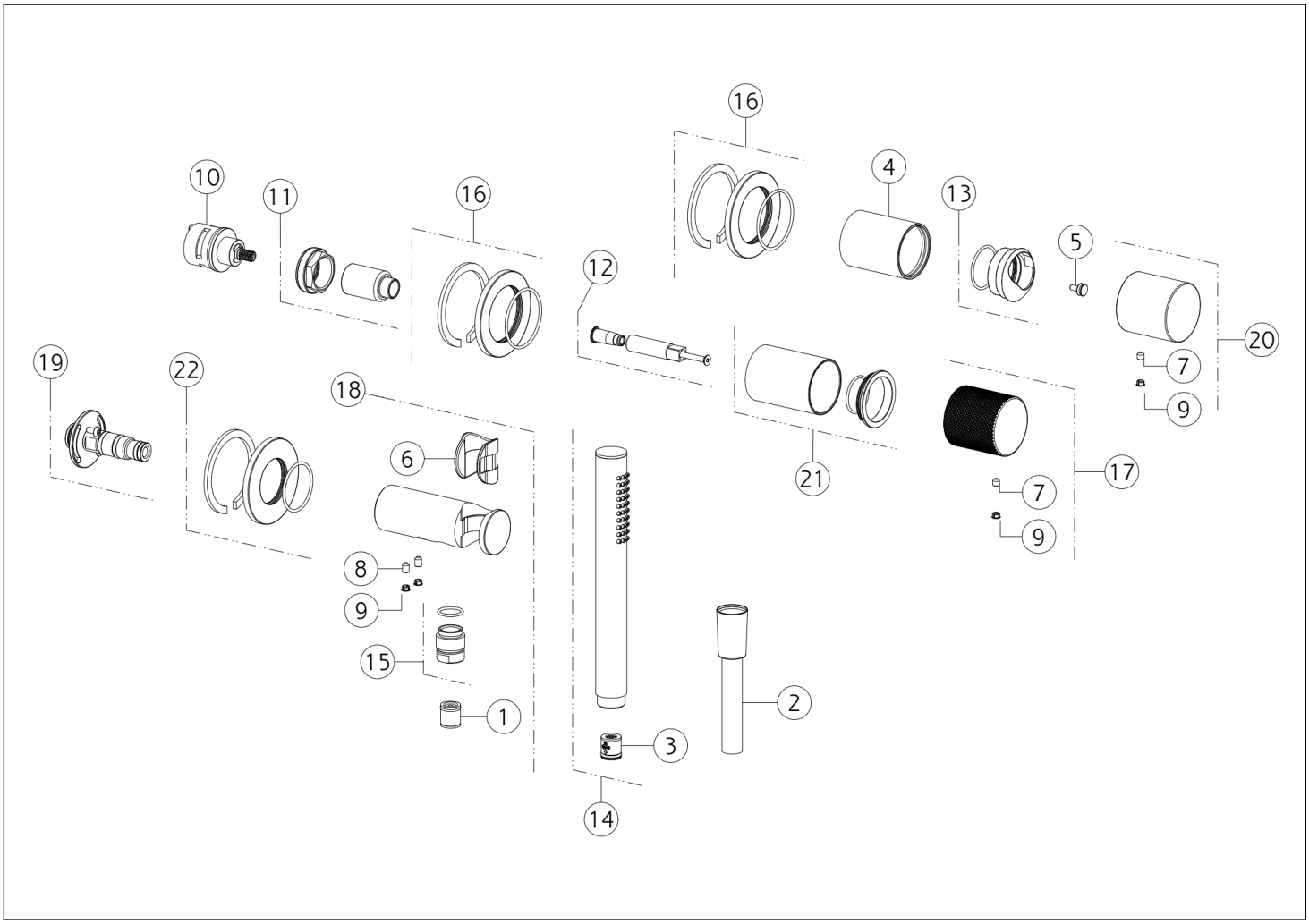

N°	Code	Description
1	SP00014	NON RETURN VALVE
2	PF01637	HOSE
3	SP01634	FLOW REGOLATOR
4	SP03248	FINISHING BUSHING
5	SP04110	SPACER
6	SP01823	BUSH
7	SP00610	SCREW
8	SP00864	SCREW
9	SP00002	SCREW COVER
10	SP01758	DIVERTER
11	SP01762	FIXING RING NUT

N°	Code	Description
12	SP04103	EXTENSION
13	SP03274	FINISHING RING NUT
14	PF14371	HANDSHOWER
15	SP01008	NIPPLE
16	SP03230	COVER
17	SP04399	HANDLE
18	SP04104	CONNECTION WATER OUTLET WITH FIXED HOOK
19	SP03332	JOINT
20	SP04380	HANDLE
21	SP04105	BUSH
22	SP03337	COVER

Gessi S.p.A. Parco Gessi, 13037 Serravalle Sesia (Vercelli) Italy Tel. +39 0163 454111 Fax. +39 0163 453150 - www.gessi.com - gessi@gessi.it This drawing, as required by law, may not be made public or reproduced without the written authorization of GESSI S.p.A. Copyright GESSI S.p.A.