GESSI

72004

GPF7200400000G000

VENTAGLIO

validity date
≥ 12/2023



High version basin mixer without waste, with connecting flexibles.

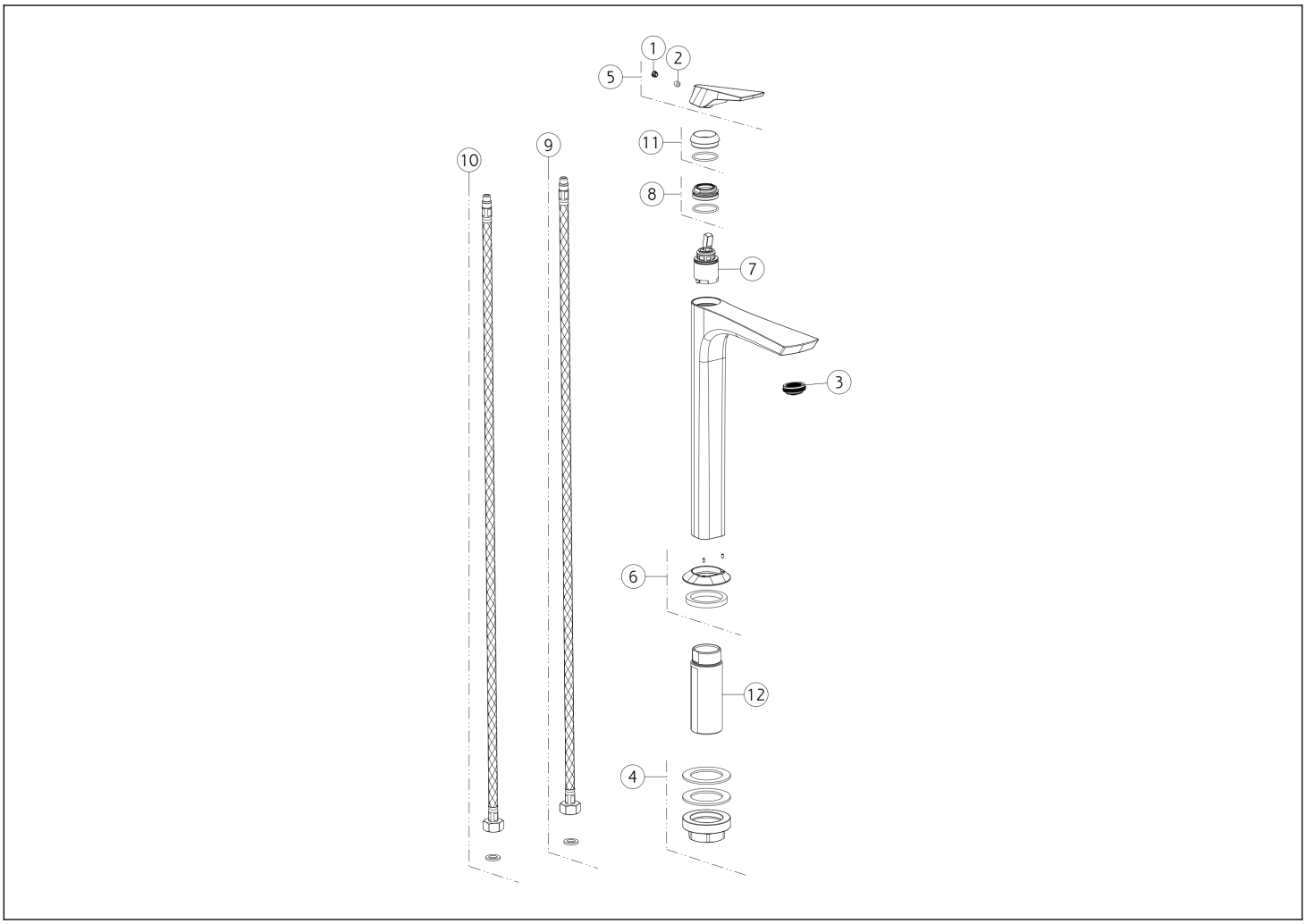

N°	Code	Description
1	SP00002	SCREW COVER
2	SP00610	GRUB SCREW
3	SP02115	AERATOR
4	SP02370	FIXING KIT
5	SP04613	HANDLE
6	SP04614	BASE PLATE

N°	Code	Description
7	SP01442	CARTRIDGE
8	SP01278	FIXING RING NUT
9	SP01286	BLUE SUPPLY HOSE
10	SP01287	RED SUPPLY HOSE
11	SP04612	FINISHING RING NUT
12	SP02372	SHANK

Gessi S.p.A. Parco Gessi, 13037 Serravalle Sesia (Vercelli) Italy Tel. +39 0163 454111 Fax. +39 0163 453150 - www.gessi.com - gessi@gessi.it This drawing, as required by law, may not be made public or reproduced without the written authorization of GESSI S.p.A. Copyright GESSI S.p.A.