GESSI

72036

GPF7203600000G000

VENTAGLIO

validity date
≥ 06/2024



External part wall-mounted two-ways shower mixer with handshower and diverter.

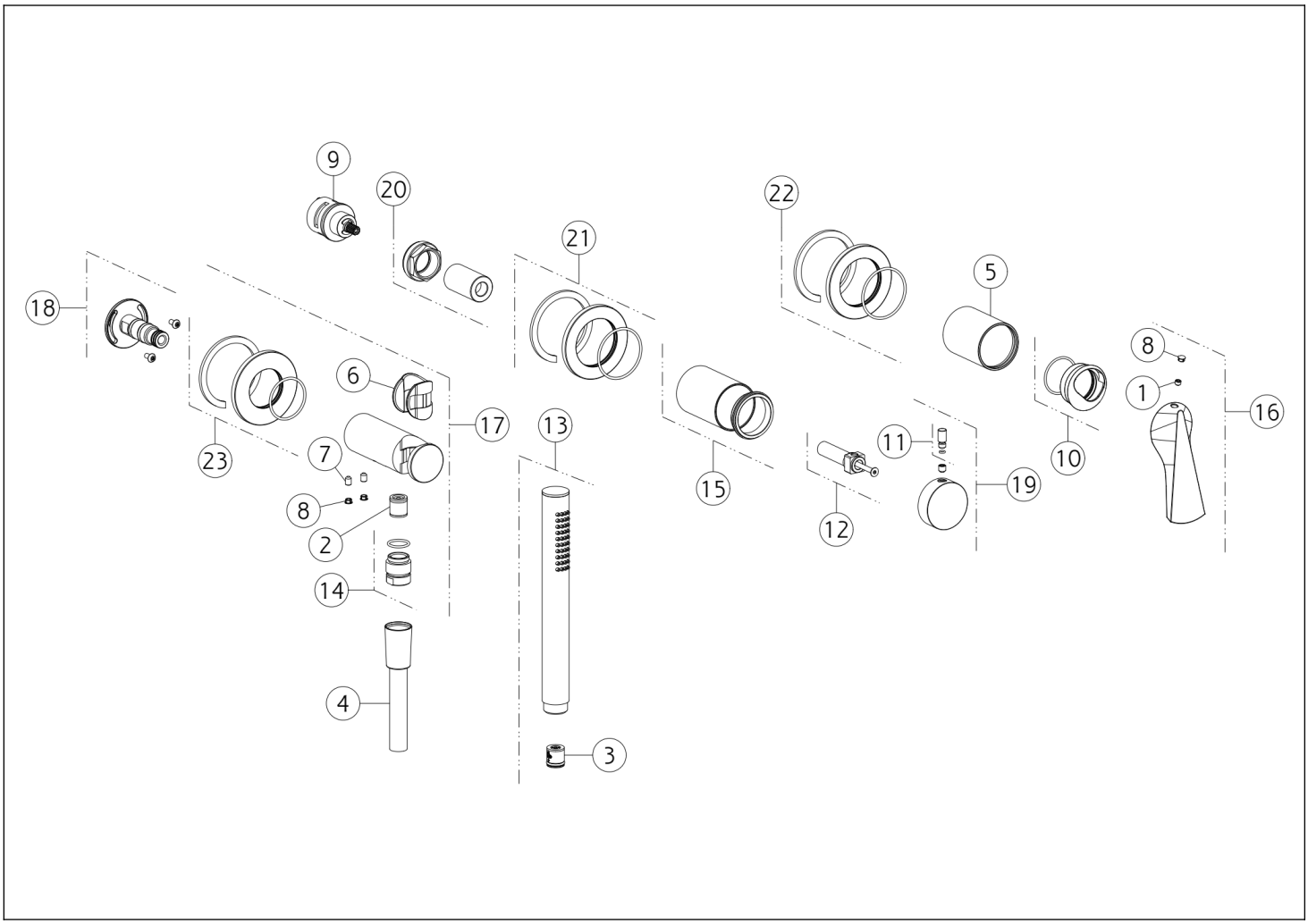

N°	Code	Description
1	SP00137	GRUB SCREW
2	SP00014	NON RETURN VALVE
3	SP01634	FLOW LIMITING VALVE
4	PF01637	HOSE
5	SP03248	FINISHED BUSH
6	SP01823	BUSH
7	SP00864	GRUB SCREW
8	SP00002	SCREW COVER
9	SP01758	DIVERTER
10	SP03274	FINISHING RING NUT
11	SP03279	LEVER
12	SP03278	EXTENSION

N°	Code	Description
13	PF14371	HANDSHOWER
14	SP01008	NIPPLE
15	SP03277	BUSH
16	SP04792	HANDLE
17	SP04104	CONNECTION WATER OUTLET WITH FIXED HOOK
18	SP03332	JOINT
19	SP03275	HANDLE
20	SP01762	FIXING RING NUT
21	SP03230	ROSETTE
22	SP04793	ROSETTE
23	SP03337	ROSETTE

Gessi S.p.A. Parco Gessi, 13037 Serravalle Sesia (Vercelli) Italy Tel. +39 0163 454111 Fax. +39 0163 453150 - www.gessi.com - gessi@gessi.it This drawing, as required by law, may not be made public or reproduced without the written authorization of GESSI S.p.A. Copyright GESSI S.p.A.