GESSI

72053

GPF7205300000G000

VENTAGLIO

validity date
≥ 06/2024



High version basin mixer with Stop&Go waste and connecting flexibles.

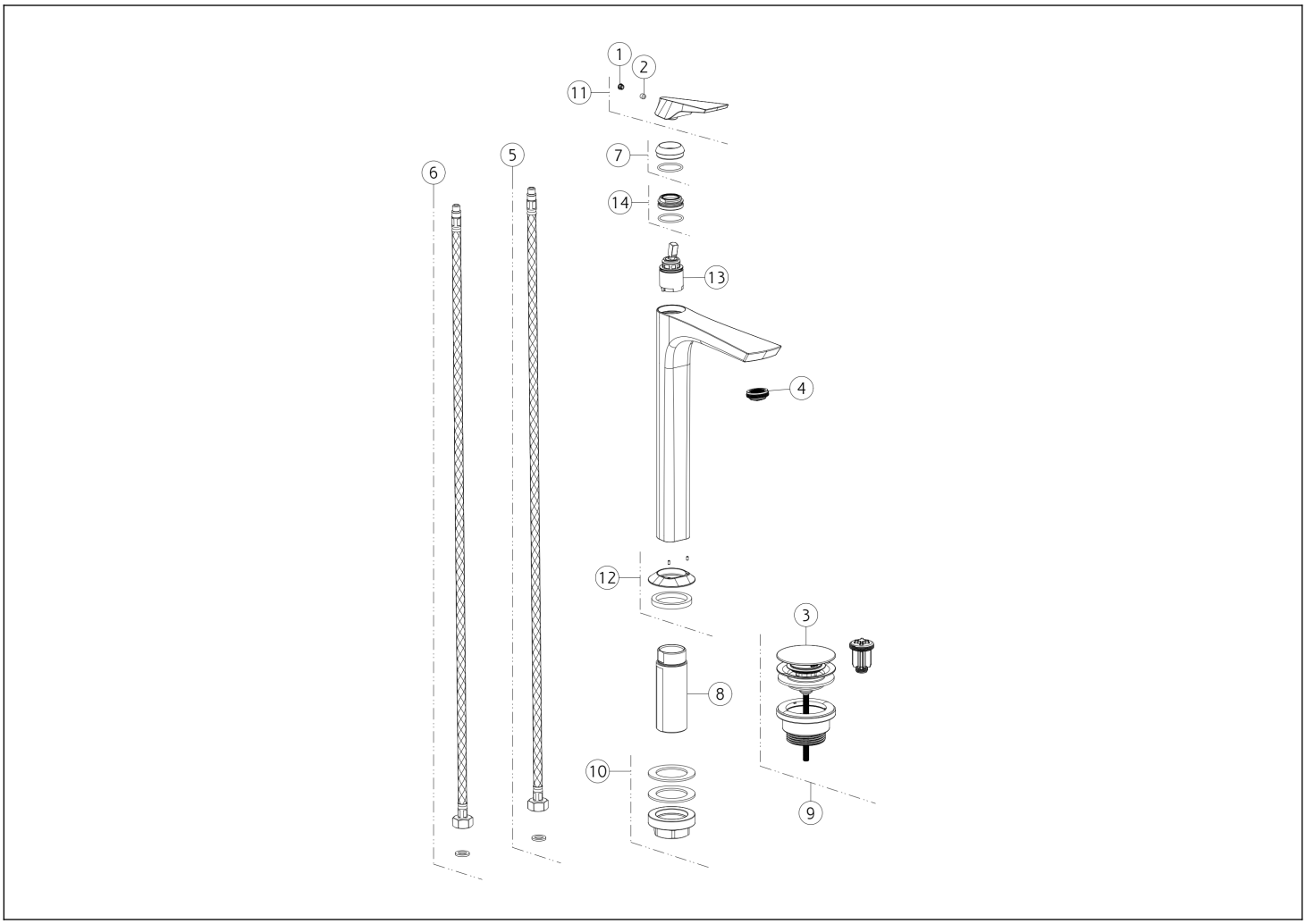

N°	Code	Description
1	SP00002	SCREW COVER
2	SP00610	SCREW
3	SP00772	PLUG
4	SP02115	AERATOR
5	SP01286	BLU SUPPLY HOSE
6	SP01287	RED SUPPLY HOSE
7	SP04612	FINISHING RING NUT

N°	Code	Description
8	SP02372	SHANK
9	PF01421	BASIN WASTE
10	SP02370	FIXING SET
11	SP04613	HANDLE
12	SP04614	BASE
13	SP01442	CARTRIDGE
14	SP01278	FIXING RING NUT

Gessi S.p.A. Parco Gessi, 13037 Serravalle Sesia (Vercelli) Italy Tel. +39 0163 454111 Fax. +39 0163 453150 - www.gessi.com - gessi@gessi.it This drawing, as required by law, may not be made public or reproduced without the written authorization of GESSI S.p.A. Copyright GESSI S.p.A.