GESSI

72088

GPF7208800000G000

VENTAGLIO

validity date
≥ 06/2026



External part wall-mounted basin mixer.

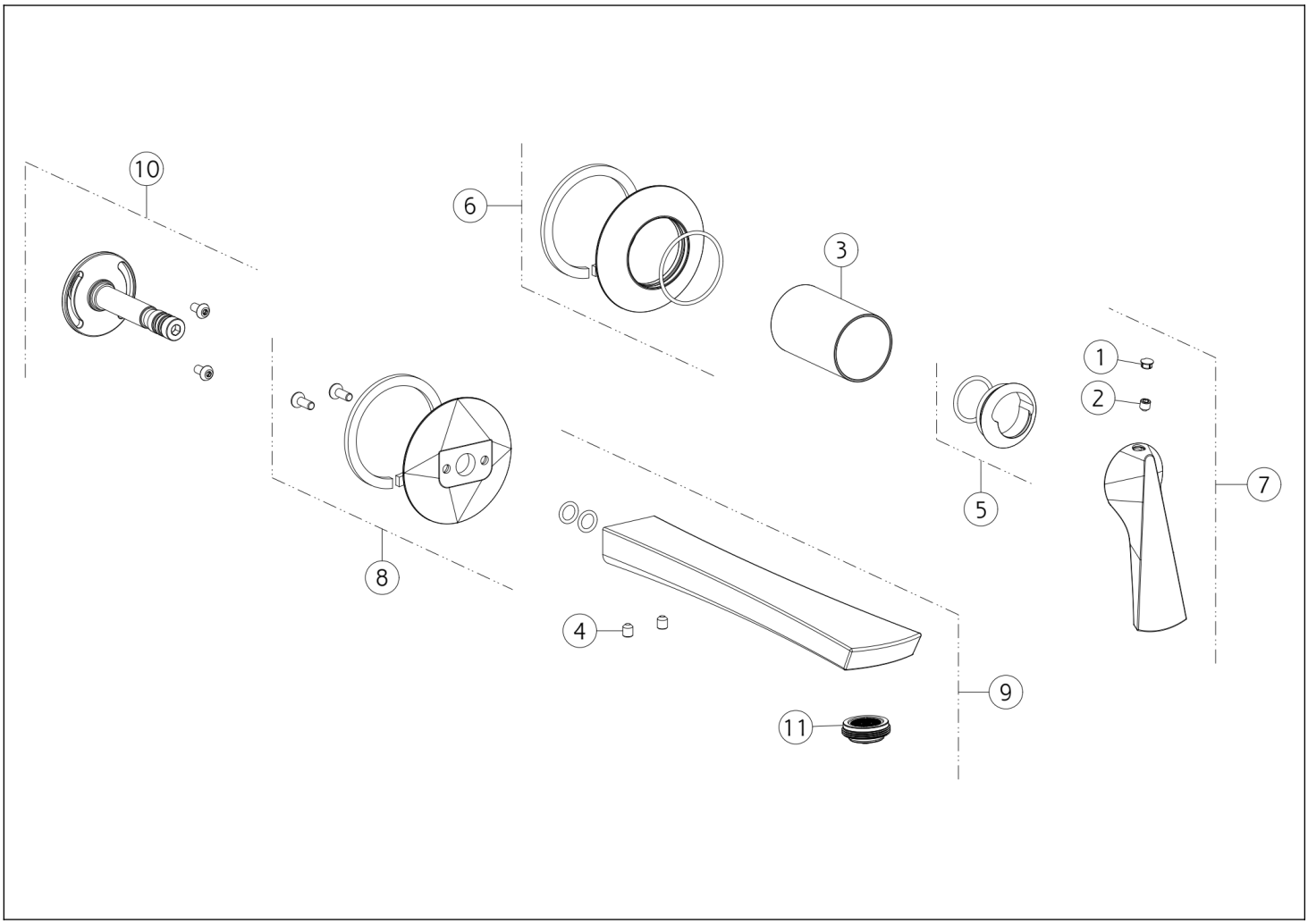

N°	Code	Description
1	SP00002	SCREW COVER
2	SP00610	SCREW
3	SP03269	FINISHING BUSHING
4	SP00284	SCREW
5	SP04671	FINISHING RING NUT
6	SP04787	COVER

N°	Code	Description
7	SP04788	HANDLE
8	SP04789	COVER
9	SP04790	SPOUT
10	SP03272	JOINT
11	SP02115	AERATOR

Gessi S.p.A. Parco Gessi, 13037 Serravalle Sesia (Vercelli) Italy Tel. +39 0163 454111 Fax. +39 0163 453150 - www.gessi.com - gessi@gessi.it This drawing, as required by law, may not be made public or reproduced without the written authorization of GESSI S.p.A. Copyright GESSI S.p.A.