GESSI

72095

GPF7209500000G000

VENTAGLIO

validity date
≥ 06/2026



External part freestanding basin mixer.

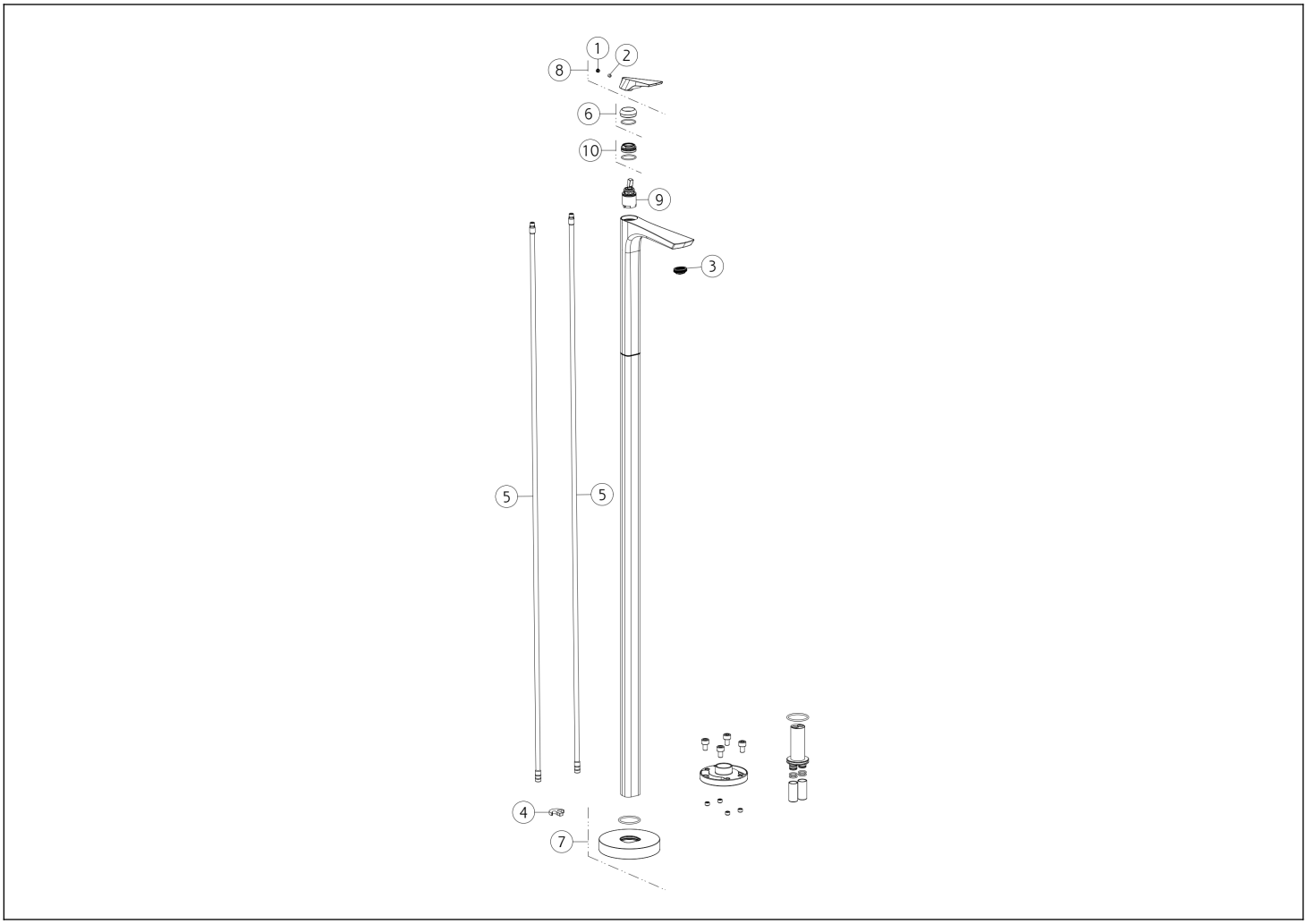

N°	Code	Description
1	SP00002	SCREW COVER
2	SP00610	GRUB SCREW
3	SP02115	AERATOR
4	SP04119	RING
5	SP04121	TUBE

N°	Code	Description
6	SP04612	FINISHING RING NUT
7	SP04794	ROSETTE
8	SP04613	HANDLE
9	SP01442	CARTRIDGE
10	SP01278	FIXING RING NUT

Gessi S.p.A. Parco Gessi, 13037 Serravalle Sesia (Vercelli) Italy Tel. +39 0163 454111 Fax. +39 0163 453150 - www.gessi.com - gessi@gessi.it This drawing, as required by law, may not be made public or reproduced without the written authorization of GESSI S.p.A. Copyright GESSI S.p.A.