GESSI

72103

GPF7210300000G000

VENTAGLIO

validity date
≥ 06/2026

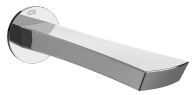

Wall-mounted bath spout.

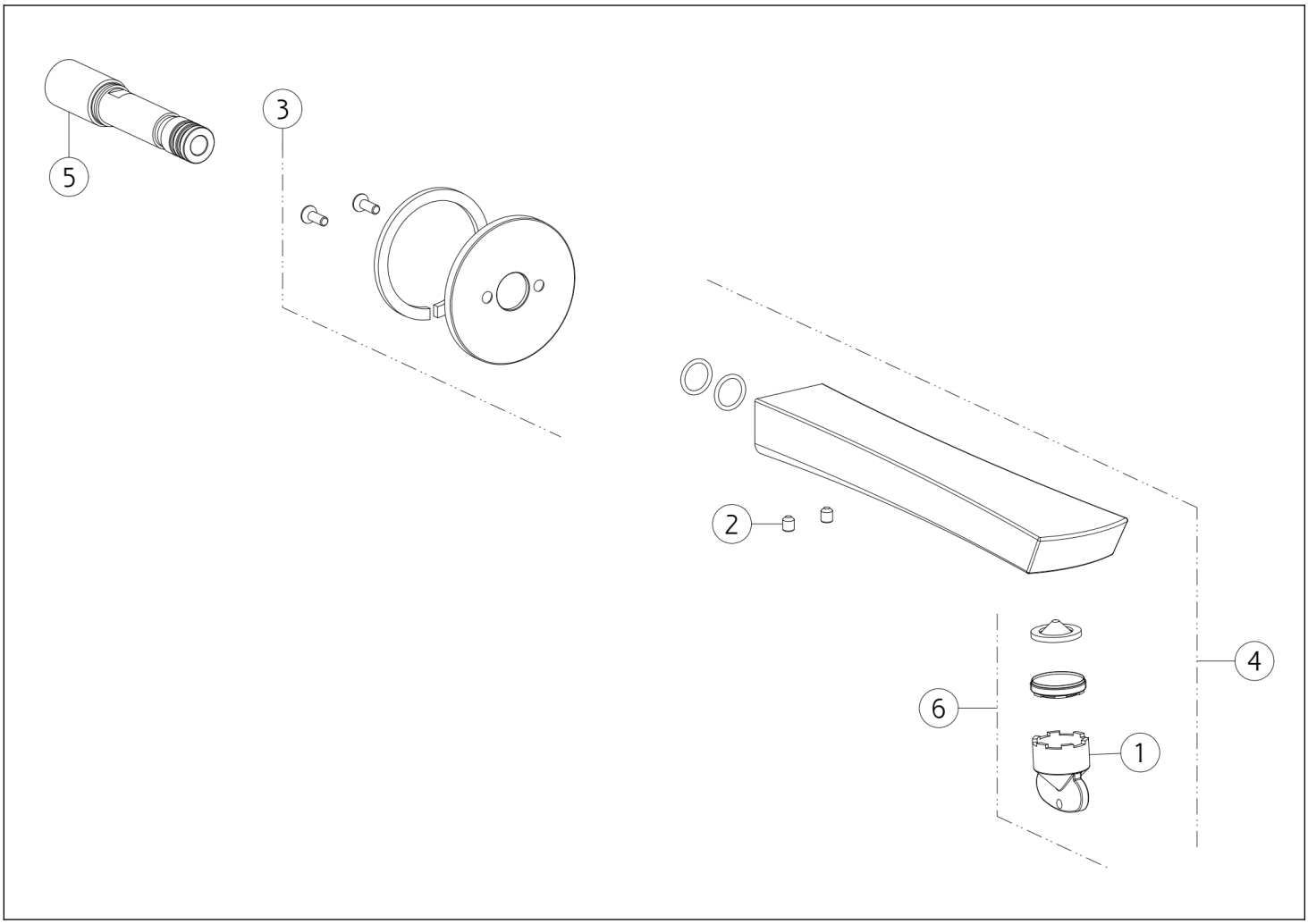

N°	Code	Description
1	SP00151	KEY
2	SP00284	GRUB SCREW
3	SP04796	ROSETTE

N°	Code	Description
4	SP04797	SPOUT
5	SP03548	JOINT
6	SP00521	COMPLETE AERATOR

Gessi S.p.A. Parco Gessi, 13037 Serravalle Sesia (Vercelli) Italy Tel. +39 0163 454111 Fax. +39 0163 453150 - www.gessi.com - gessi@gessi.it This drawing, as required by law, may not be made public or reproduced without the written authorization of GESSI S.p.A. Copyright GESSI S.p.A.