GESSI

72521

GPF7252100000G000

VENTAGLIO

validity date
≥ 06/2026



Wall-mounted robe hook.

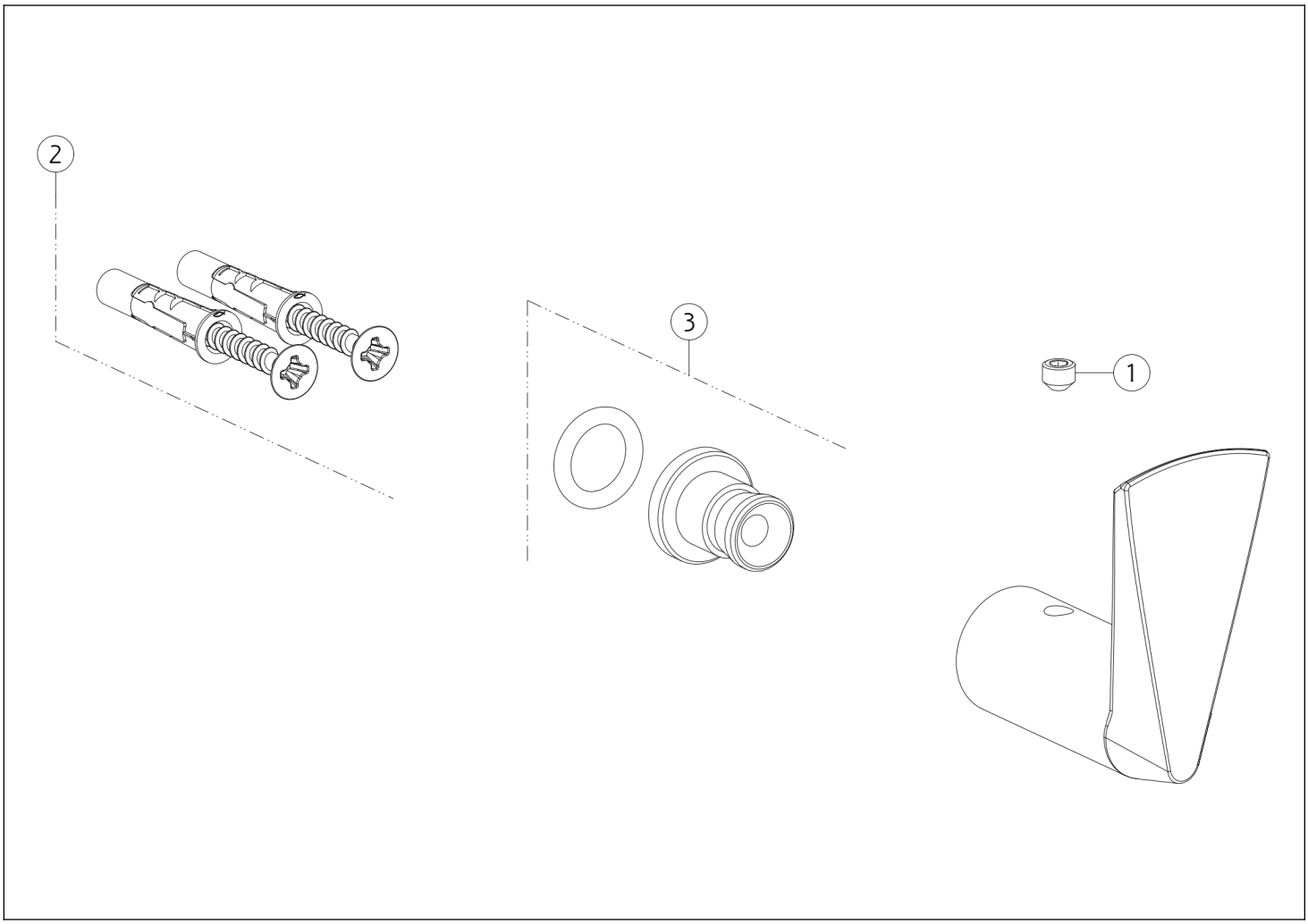

N°	Code	Description
1	SP00137	GRUB SCREW
2	SP00031	FIXING KIT

N°	Code	Description
3	SP04799	WALL-MOUNTED HOLDER

Gessi S.p.A. Parco Gessi, 13037 Serravalle Sesia (Vercelli) Italy Tel. +39 0163 454111 Fax. +39 0163 453150 - www.gessi.com - gessi@gessi.it This drawing, as required by law, may not be made public or reproduced without the written authorization of GESSI S.p.A. Copyright GESSI S.p.A.