GESSI

73036

GPF7303600000G000

INVERSO

validity date
≥ 06/2026

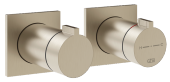

External part wall-mounted three-ways thermostatic shower mixer.

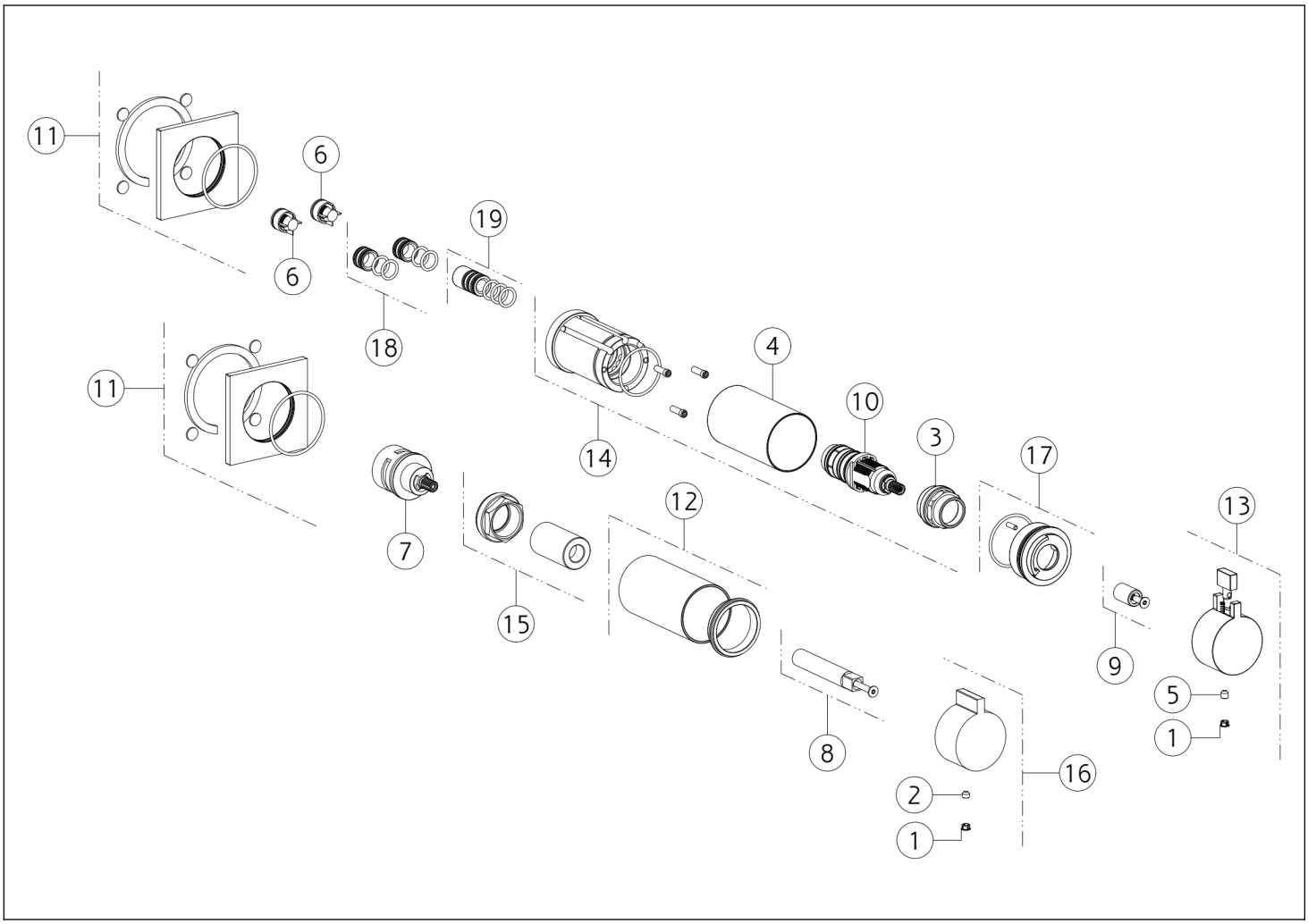

N°	Code	Description
1	SP00002	SCREW COVER
2	SP00137	SCREW
3	SP01185	FIXING RING NUT
4	SP04168	FINISHING BUSHING
5	SP00610	SCREW
6	SP01784	NON RETURN VALVE
7	SP01794	DIVERTER
8	SP04182	EXTENSION
9	SP01779	EXTENSION
10	SP01184	THERMOSTATIC CARTRIDGE

N°	Code	Description
11	SP04851	COVER
12	SP04873	FINISHING BUSHING
13	SP04868	HANDLE
14	SP03285	BODY
15	SP01762	FIXING RING NUT
16	SP04853	HANDLE
17	SP01781	INDICATOR RING
18	SP01783	JOINT
19	SP01730	JOINT

Gessi S.p.A. Parco Gessi, 13037 Serravalle Sesia (Vercelli) Italy Tel. +39 0163 454111 Fax. +39 0163 453150 - www.gessi.com - gessi@gessi.it This drawing, as required by law, may not be made public or reproduced without the written authorization of GESSI S.p.A. Copyright GESSI S.p.A.