GESSI

73060

GPF7306000000G000

INVERSO

validity date
≥ 07/2024

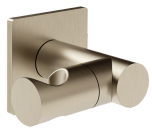

Adjustable handshower hook.

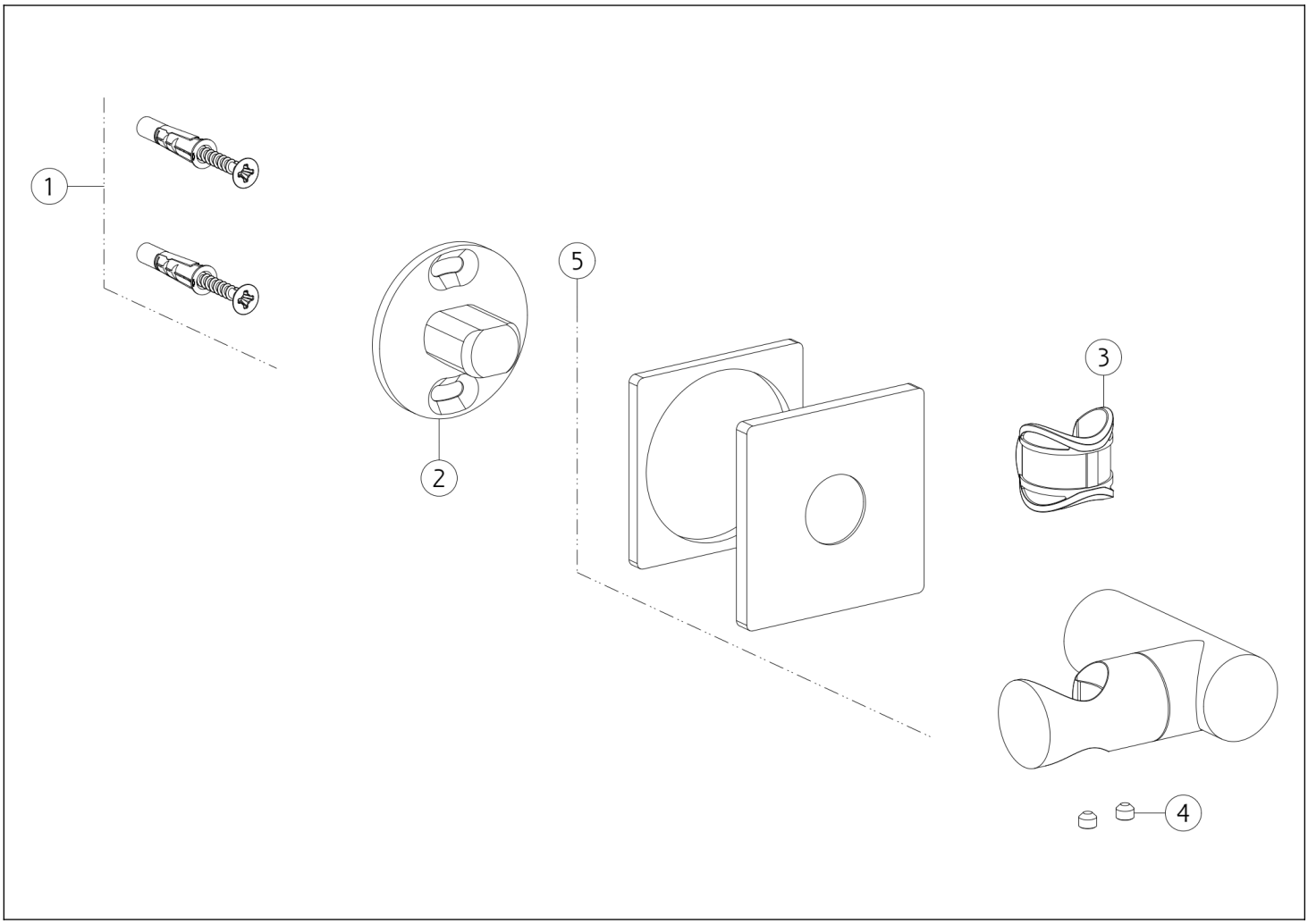

N°	Code	Description
1	SP00031	FIXING SET
2	SP00093	WALL SUPPORT
3	SP04870	BUSH

N°	Code	Description
4	SP00137	SCREW
5	SP04869	COVER

Gessi S.p.A. Parco Gessi, 13037 Serravalle Sesia (Vercelli) Italy Tel. +39 0163 454111 Fax. +39 0163 453150 - www.gessi.com - gessi@gessi.it This drawing, as required by law, may not be made public or reproduced without the written authorization of GESSI S.p.A. Copyright GESSI S.p.A.