GESSI

73069

GPF7306900000G000

INVERSO

validity date
≥ 08/2024



Water outlet.

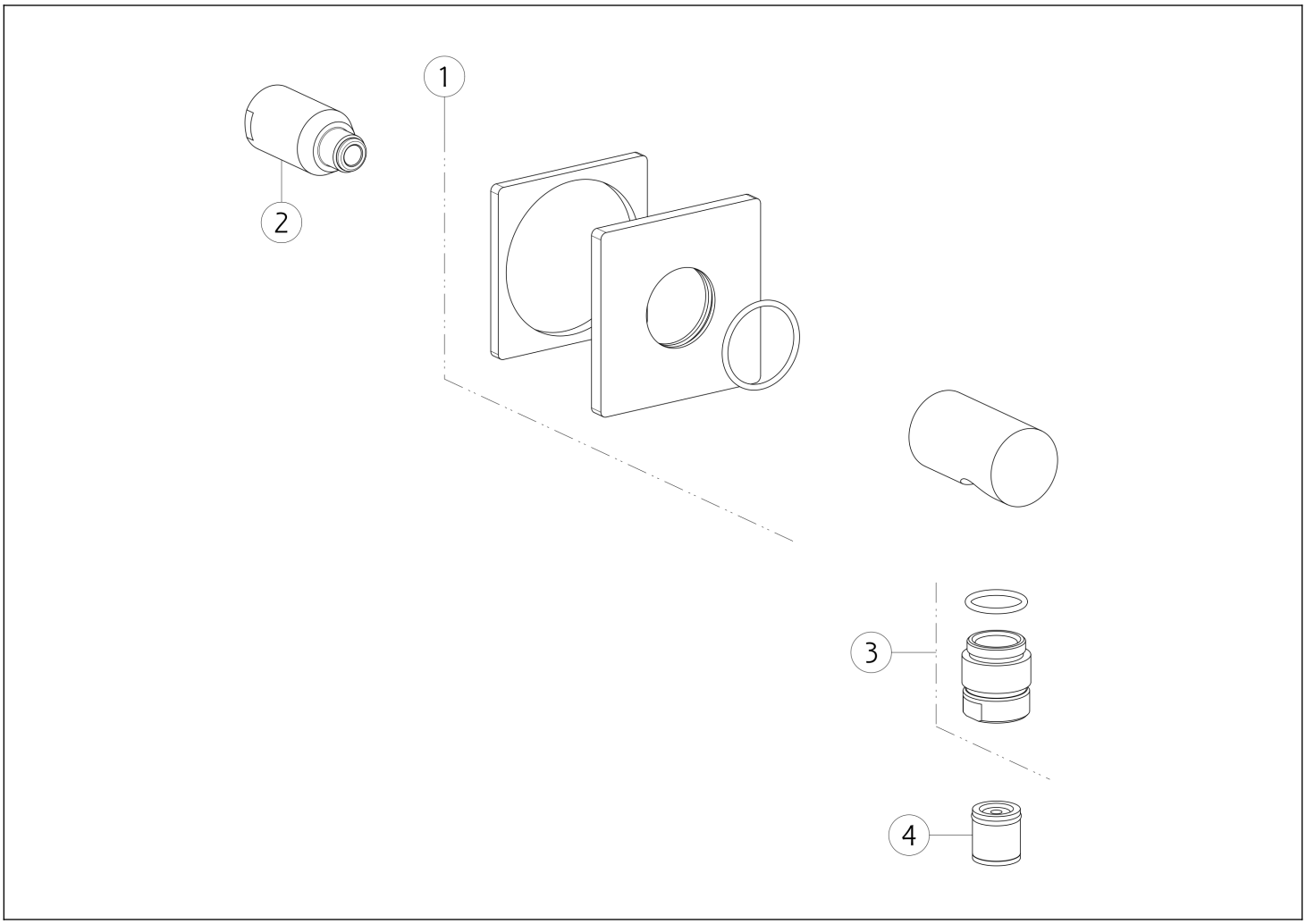

N°	Code	Description
1	SP04871	COVER
2	SP04472	NIPPLE

N°	Code	Description
3	SP01008	NIPPLE
4	SP00014	NON RETURN VALVE

Gessi S.p.A. Parco Gessi, 13037 Serravalle Sesia (Vercelli) Italy Tel. +39 0163 454111 Fax. +39 0163 453150 - www.gessi.com - gessi@gessi.it This drawing, as required by law, may not be made public or reproduced without the written authorization of GESSI S.p.A. Copyright GESSI S.p.A.