GESSI

73102

GPF7310200000G000

INVERSO

validity date
≥ 06/2026



Wall-mounted basin spout.

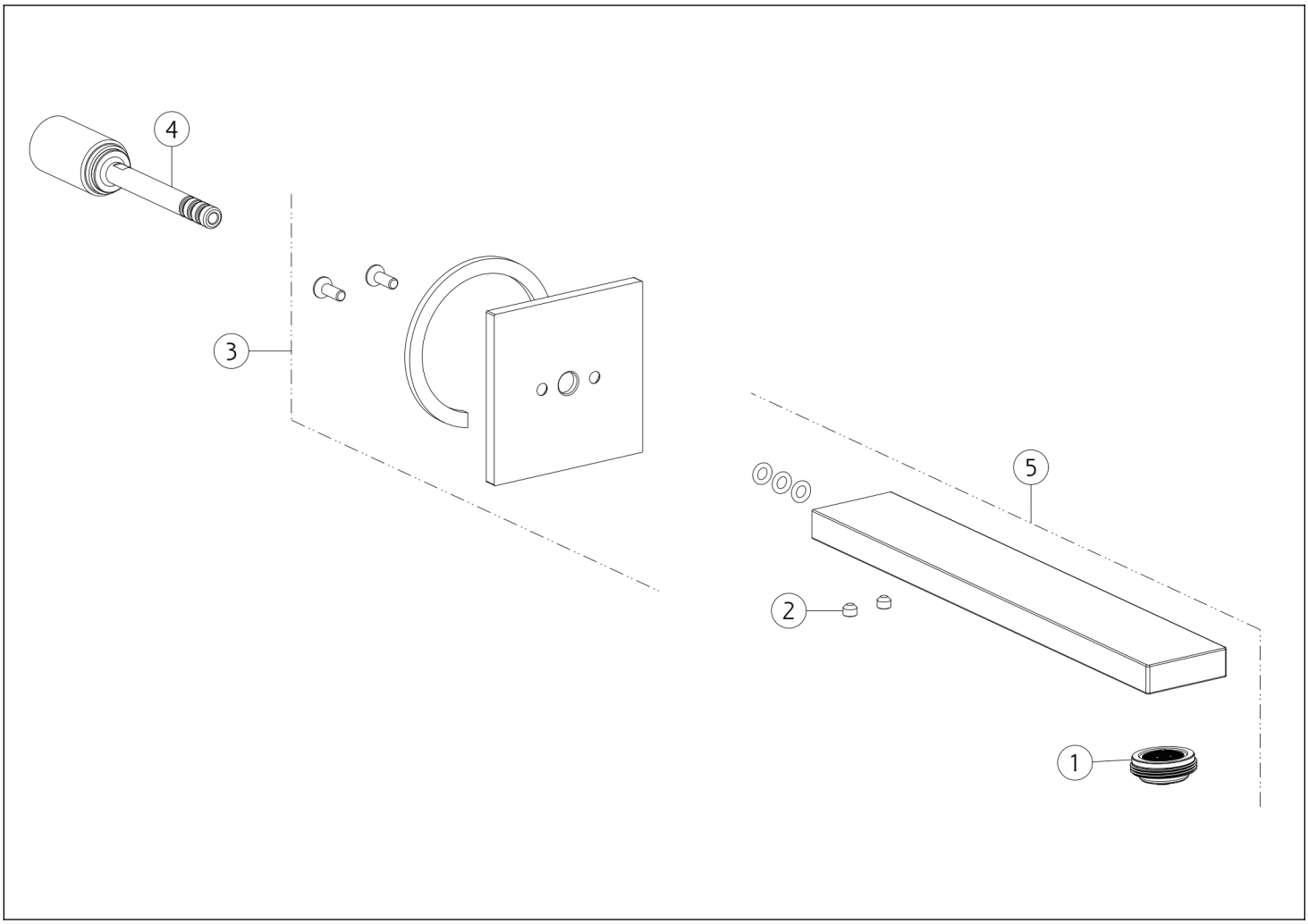

N°	Code	Description
1	SP00923	COMPLETE AERATOR
2	SP00137	SCREW
3	SP04822	COVER

N°	Code	Description
4	SP04823	JOINT
5	SP04820	SPOUT

Gessi S.p.A. Parco Gessi, 13037 Serravalle Sesia (Vercelli) Italy Tel. +39 0163 454111 Fax. +39 0163 453150 - www.gessi.com - gessi@gessi.it This drawing, as required by law, may not be made public or reproduced without the written authorization of GESSI S.p.A. Copyright GESSI S.p.A.