GESSI

73103

GPF7310300000G000

INVERSO

validity date
≥ 07/2024



Wall-mounted bath spout.

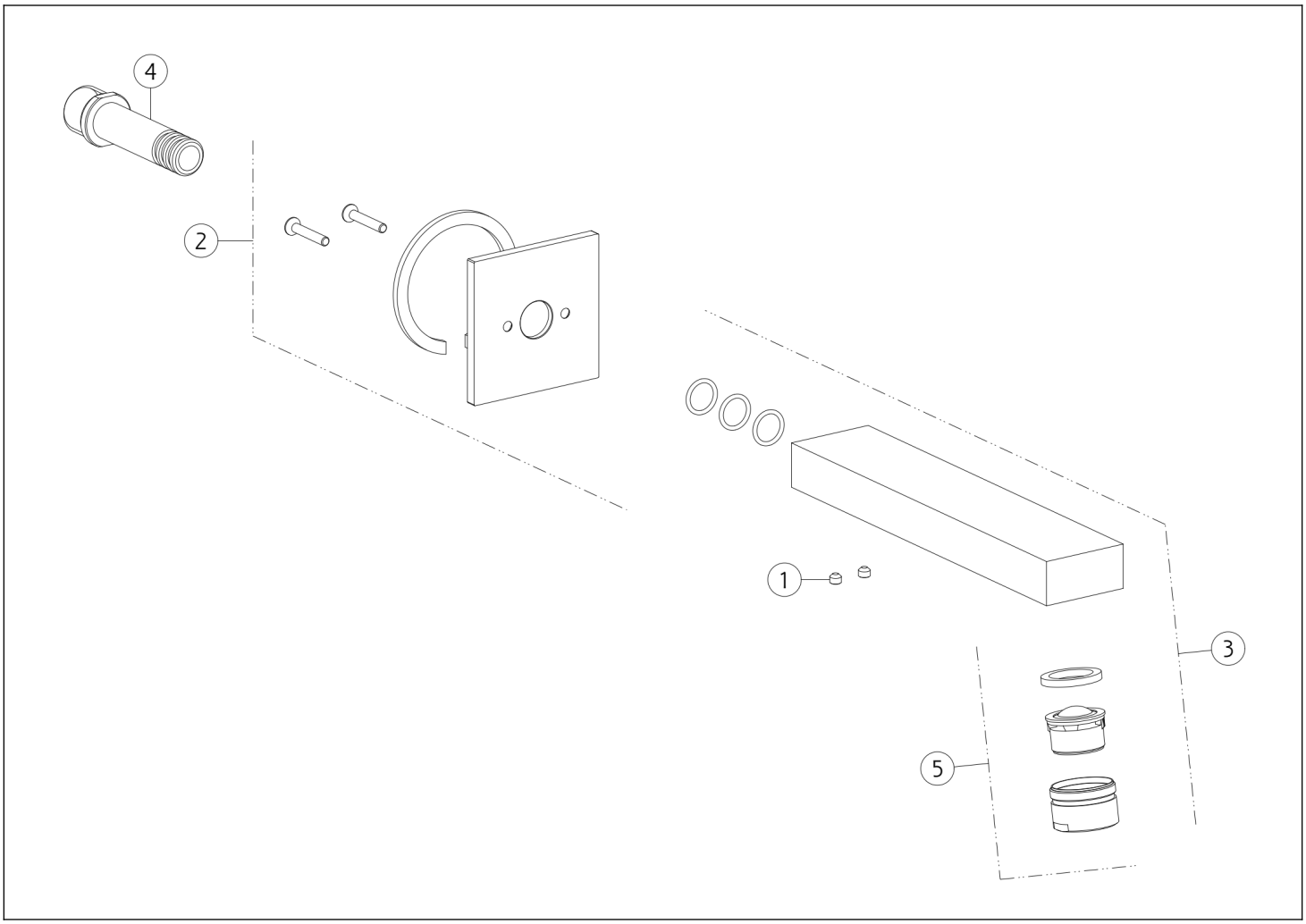

N°	Code	Description
1	SP00137	SCREW
2	SP04864	COVER
3	SP00851	COMPLETE SPOUT

N°	Code	Description
4	SP00146	JOINT
5	SP00853	COMPLETE AERATOR

Gessi S.p.A. Parco Gessi, 13037 Serravalle Sesia (Vercelli) Italy Tel. +39 0163 454111 Fax. +39 0163 453150 - www.gessi.com - gessi@gessi.it This drawing, as required by law, may not be made public or reproduced without the written authorization of GESSI S.p.A. Copyright GESSI S.p.A.