GESSI

73519

GPF7351900000G000

INVERSO

validity date
≥ 07/2024



External part wall-mounted one-way shower mixer. RIGATO.

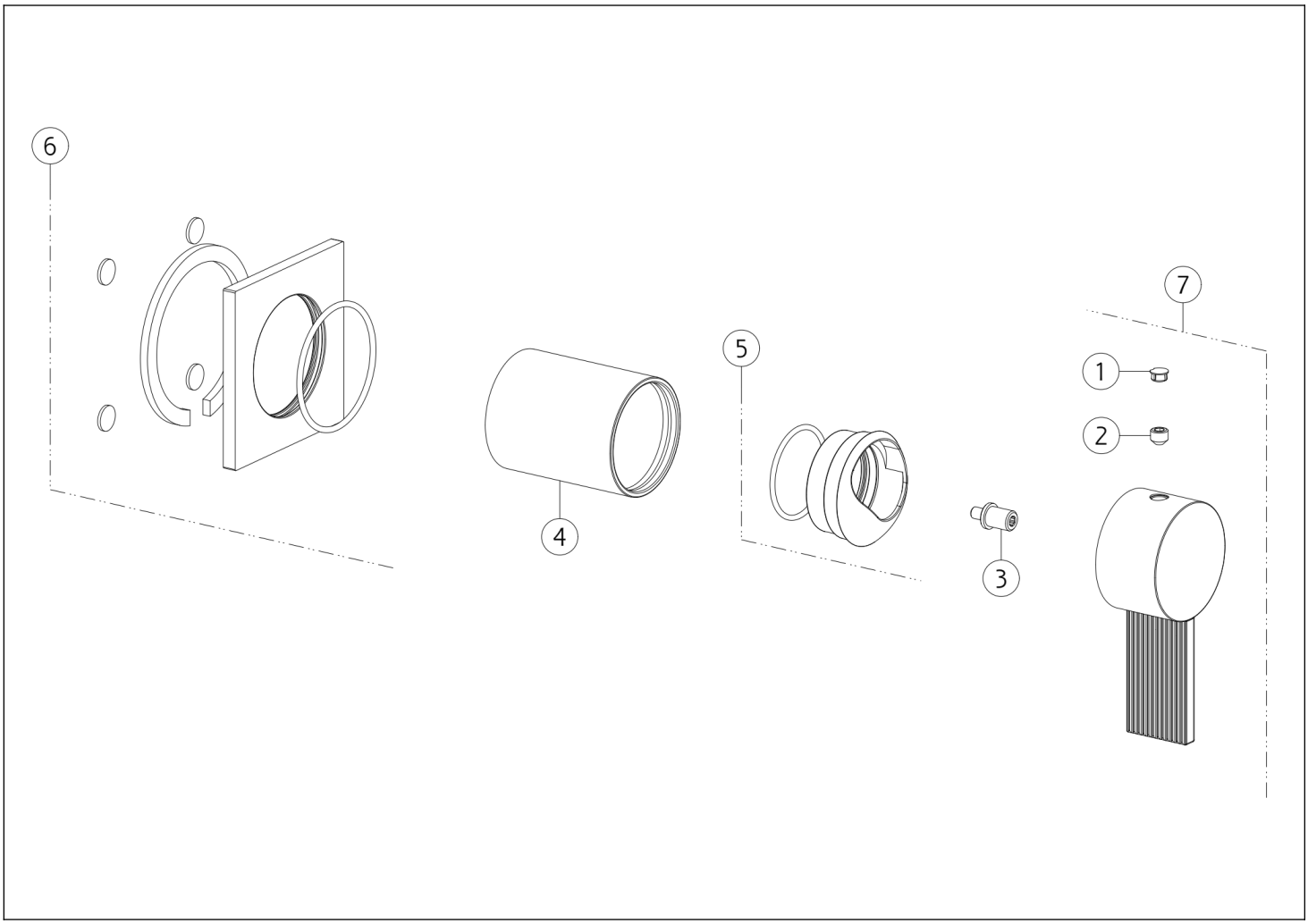

N°	Code	Description
1	SP00002	SCREW COVER
2	SP02942	SCREW
3	SP04852	SPACER
4	SP03248	FINISHING BUSHING

N°	Code	Description
5	SP03274	FINISHING RING NUT
6	SP04851	COVER
7	SP04854	HANDLE

Gessi S.p.A. Parco Gessi, 13037 Serravalle Sesia (Vercelli) Italy Tel. +39 0163 454111 Fax. +39 0163 453150 - www.gessi.com - gessi@gessi.it This drawing, as required by law, may not be made public or reproduced without the written authorization of GESSI S.p.A. Copyright GESSI S.p.A.