GESSI

73523

GPF7352300000G000

INVERSO

validity date
≥ 07/2024



Shower set with water outlet, antilimestone handshower and 1,50 m flexible hose.

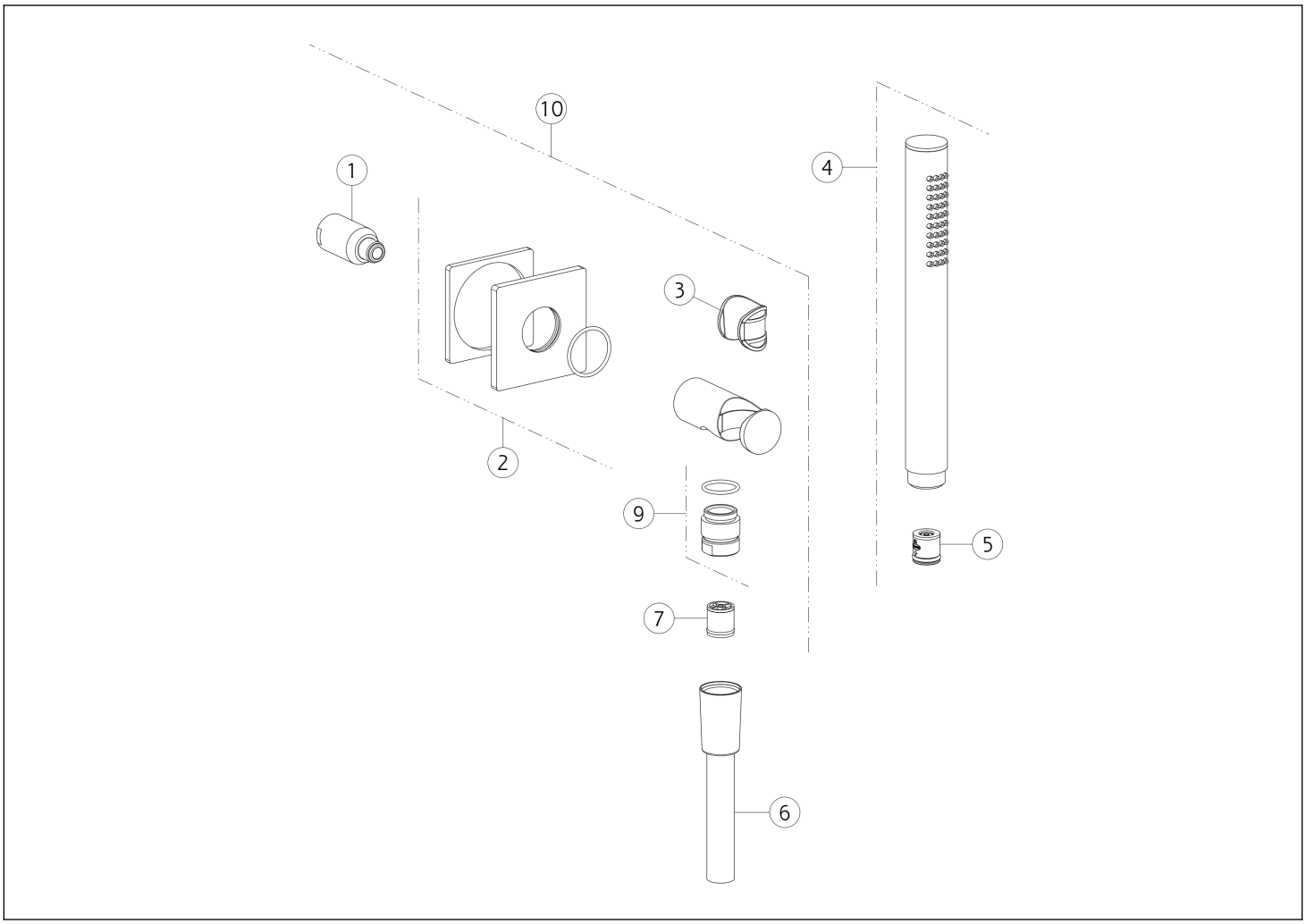

N°	Code	Description
1	SP04472	NIPPLE
2	SP04871	COVER
3	SP04870	BUSH
4	PF14371	HANDSHOWER
5	SP01634	FLOW REGOLATOR

N°	Code	Description
6	PF01637	HOSE
7	SP00014	NON RETURN VALVE
8	SP05075	CONNECTION WATER OUTLET WITH FIXED HOOK
9	SP01008	NIPPLE

 This drawing, as required by law, may not be made public or reproduced without the written authorization of GESSI S.p.A. Copyright GESSI S.p.A.