GESSI

73538

GPF7353800000G000

INVERSO

validity date
≥ 09/2024



External part wall-mounted two-ways shower mixer. RIGATO.

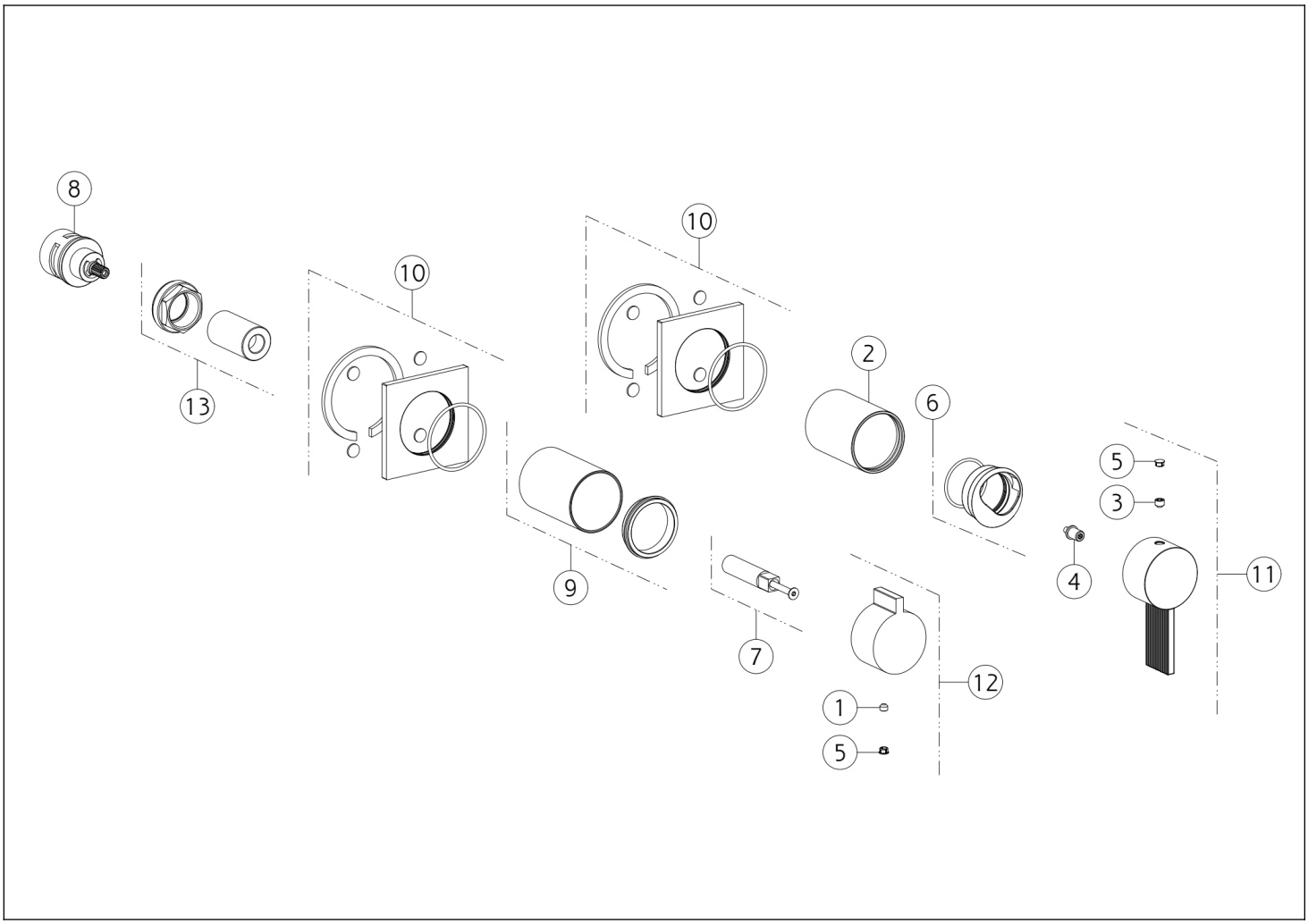

N°	Code	Description
1	SP00137	SCREW
2	SP03248	FINISHING BUSHING
3	SP02942	SCREW
4	SP04852	SPACER
5	SP00002	SCREW COVER
6	SP03274	FINISHING RING NUT
7	SP04103	EXTENSION

N°	Code	Description
8	SP01758	DIVERTER
9	SP03277	BUSH
10	SP04851	COVER
11	SP04854	HANDLE
12	SP04853	HANDLE
13	SP01762	FIXING RING NUT

Gessi S.p.A. Parco Gessi, 13037 Serravalle Sesia (Vercelli) Italy Tel. +39 0163 454111 Fax. +39 0163 453150 - www.gessi.com - gessi@gessi.it This drawing, as required by law, may not be made public or reproduced without the written authorization of GESSI S.p.A. Copyright GESSI S.p.A.