GESSI

73553

GPF7355300000G000

INVERSO

validity date
≥ 06/2026



High version basin mixer with Stop&Go waste and connecting flexibles. RIGATO.

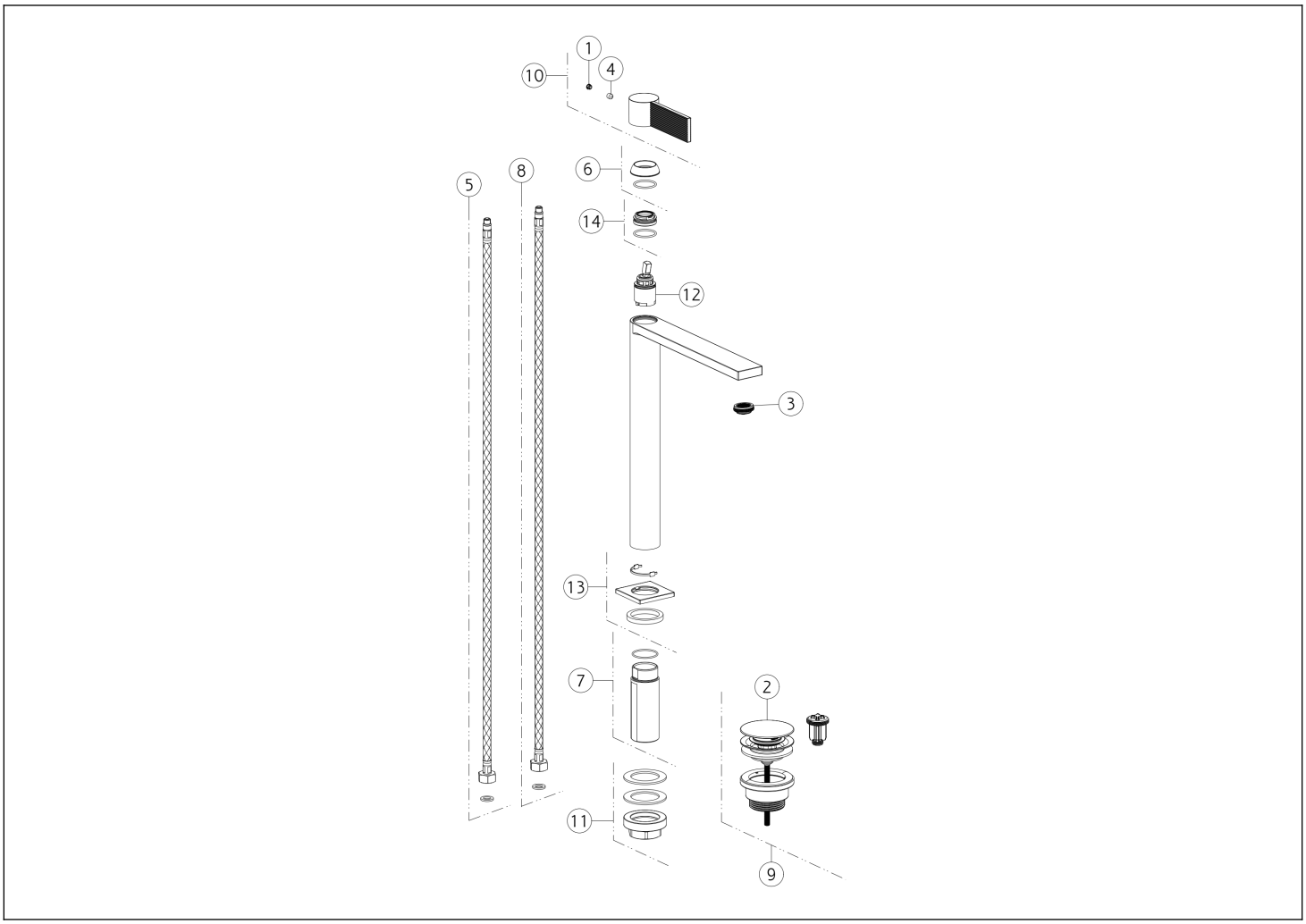

N°	Code	Description
1	SP00002	SCREW COVER
2	SP00772	PLUG
3	SP00923	COMPLETE AERATOR
4	SP00153	SCREW
5	SP01287	RED SUPPLY HOSE
6	SP04804	FINISHING RING NUT
7	SP02372	SHANK

N°	Code	Description
8	SP01286	BLU SUPPLY HOSE
9	PF01421	BASIN WASTE
10	SP04806	HANDLE
11	SP02370	FIXING SET
12	SP01442	CARTRIDGE
13	SP04805	BASE
14	SP01278	FIXING RING NUT

Gessi S.p.A. Parco Gessi, 13037 Serravalle Sesia (Vercelli) Italy Tel. +39 0163 454111 Fax. +39 0163 453150 - www.gessi.com - gessi@gessi.it This drawing, as required by law, may not be made public or reproduced without the written authorization of GESSI S.p.A. Copyright GESSI S.p.A.