GESSI

73604

GPF7360400000G000

INVERSO

validity date
≥ 06/2026



High version basin mixer without waste, with connecting flexibles. DIAMANTATO.

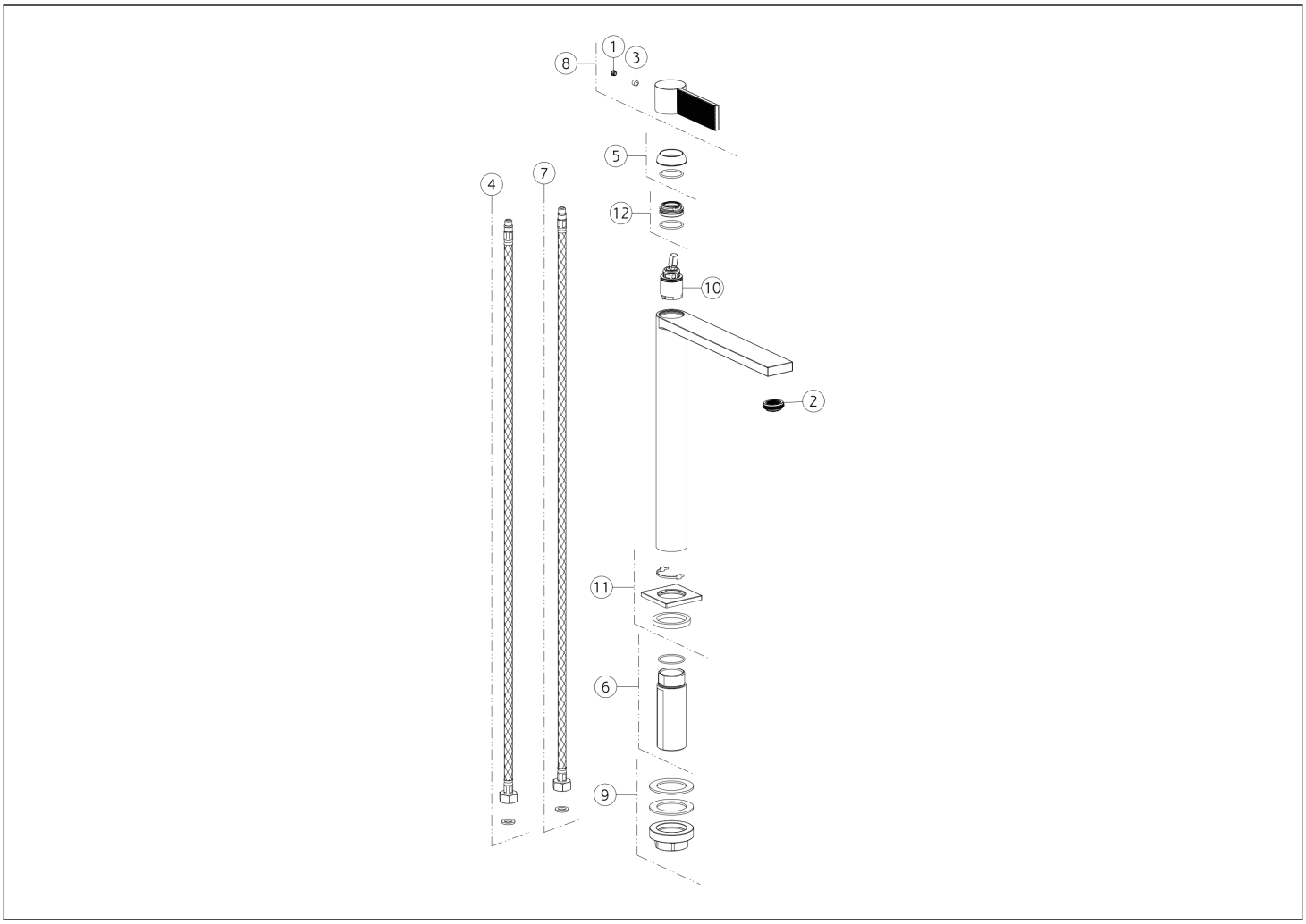

N°	Code	Description
1	SP00002	SCREW COVER
2	SP00923	COMPLETE AERATOR
3	SP00153	SCREW
4	SP01287	RED SUPPLY HOSE
5	SP04804	FINISHING RING NUT
6	SP02372	SHANK

N°	Code	Description
7	SP01286	BLU SUPPLY HOSE
8	SP04807	HANDLE
9	SP02370	FIXING SET
10	SP01442	CARTRIDGE
11	SP04805	BASE
12	SP01278	FIXING RING NUT

Gessi S.p.A. Parco Gessi, 13037 Serravalle Sesia (Vercelli) Italy Tel. +39 0163 454111 Fax. +39 0163 453150 - www.gessi.com - gessi@gessi.it This drawing, as required by law, may not be made public or reproduced without the written authorization of GESSI S.p.A. Copyright GESSI S.p.A.